leicht entwässern.

Technical drawing
Sita**Sani®** 165, 550 mm

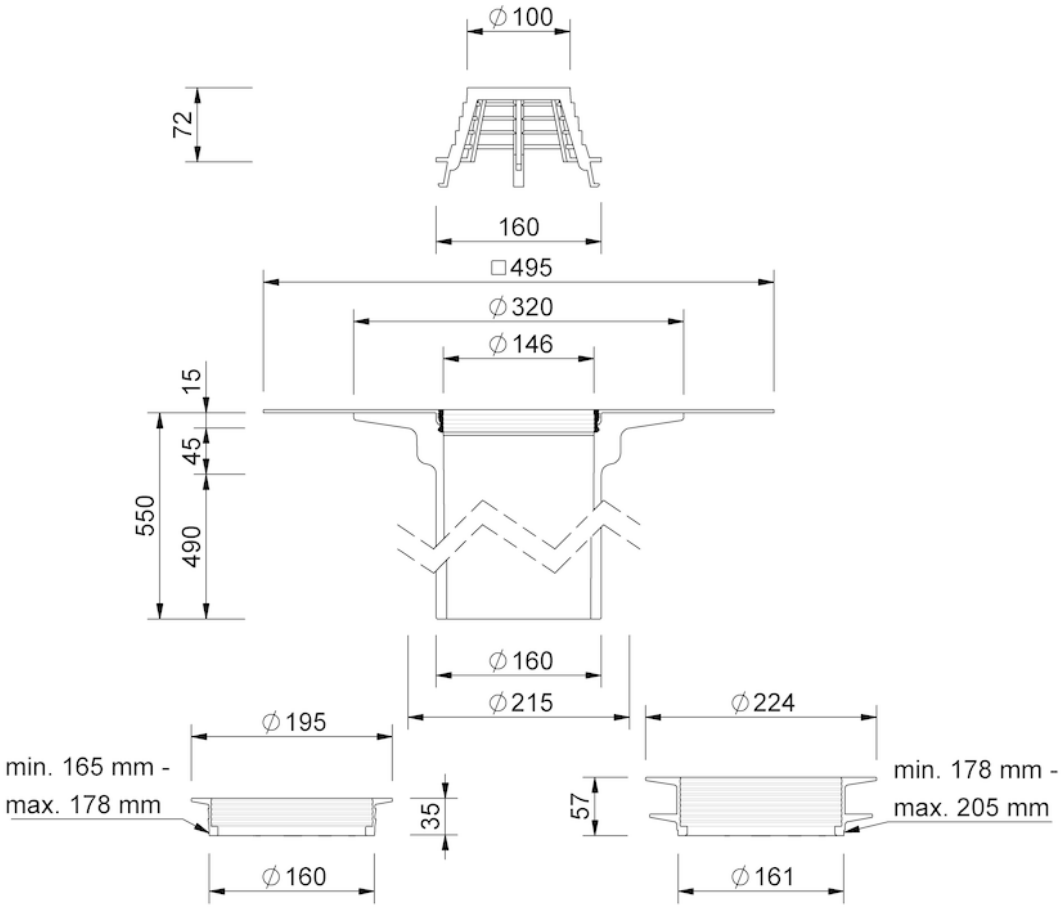

SitaSani® 165, 550 mm, with Elevate QuickSeam SA Flashing-sleeve

550 mm

Article number

104003

Changes possible due to technical development, subject to mistakes and printing errors.

Sita Bauelemente GmbH * Ferdinand-Braun-Strasse 1 * 33378 Rheda-Wiedenbrück, Germany * Tel +49 2522 8340-0 * Fax +49 2522 8340-100 * info@sita-bauelemente.de * www.sita-bauelemente.de