leicht entwässern.

Technical drawing
Sita**Vent** pipe lead-through DN 100

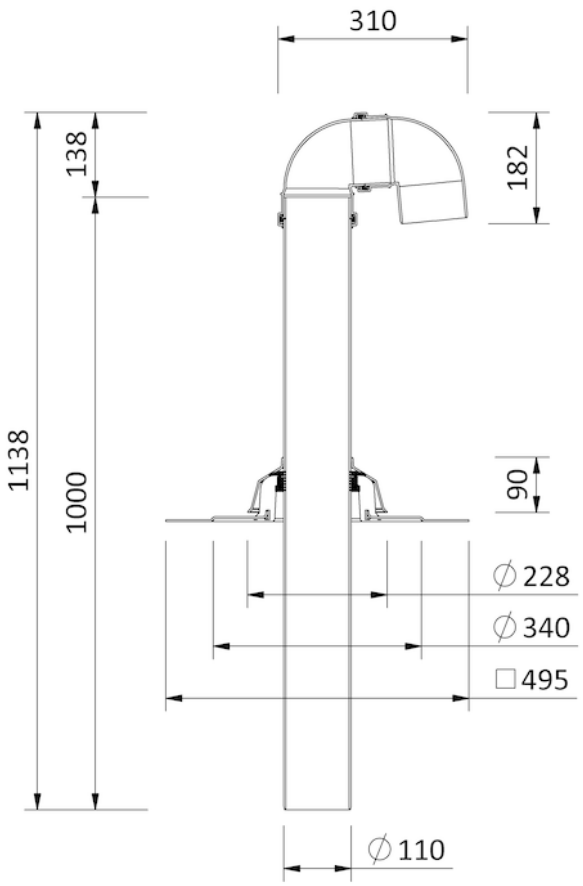

SitaVent pipe lead-through DN 100, with Sarnafil-TG 66-15 beige-s-leeve

1000 mm

Article number

176524

Changes possible due to technical development, subject to mistakes and printing errors.

Sita Bauelemente GmbH * Ferdinand-Braun-Strasse 1 * 33378 Rheda-Wiedenbrück, Germany * Tel +49 2522 8340-0 * Fax +49 2522 8340-100 * info@sita-bau-elemente.de * www.sita-bauelemente.de