leicht entwässern. sita

Technical drawing
Sita**Turbo** Max with retaining ring

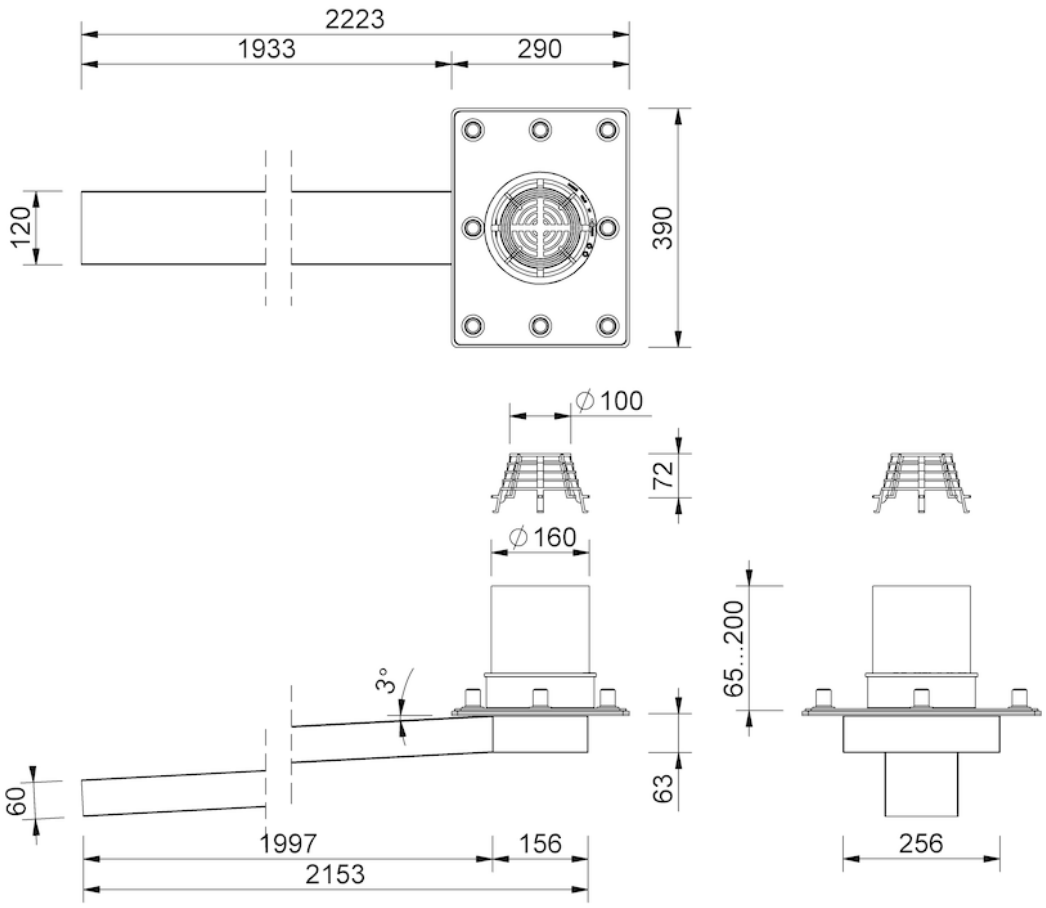

SitaTurbo Max with retaining ring, pipe length 2000 mm

200 mm

Article number

18206599

Changes possible due to technical development, subject to mistakes and printing errors.

Sita Bauelemente GmbH * Ferdinand-Braun-Strasse 1 * 33378 Rheda-Wiedenbrück, Germany * Tel +49 2522 8340-0 * Fax +49 2522 8340-100 * info@sita-bauelemente.de * www.sita-bauelemente.de