leicht entwässern. sita

Technical drawing
Sita**More** vapour barrier plate Duoflex DN 70

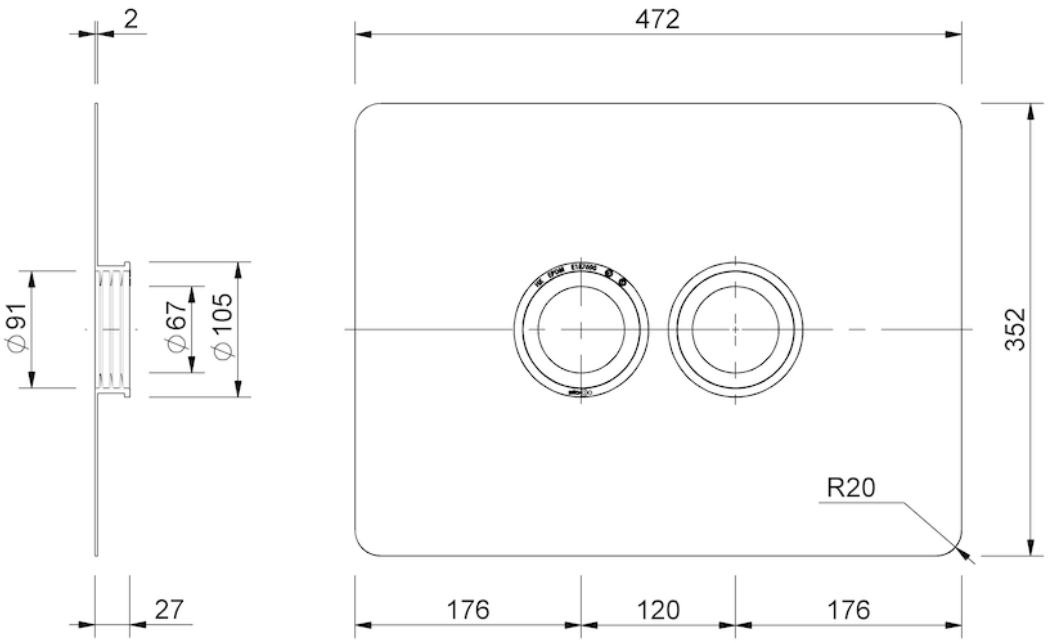

SitaMore vapour barrier plate Duoflex DN 70, made of EPDM

Article number

187690

Changes possible due to technical development, subject to mistakes and printing errors.

Sita Bauelemente GmbH * Ferdinand-Braun-Strasse 1 * 33378 Rheda-Wiedenbrück, Germany * Tel +49 2522 8340-0 * Fax +49 2522 8340-100 * info@sita-bauelemente.de * www.sita-bauelemente.de