leicht entwässern. sita

Technical drawing
Sita**More** flex vapour barrier plate DN 100

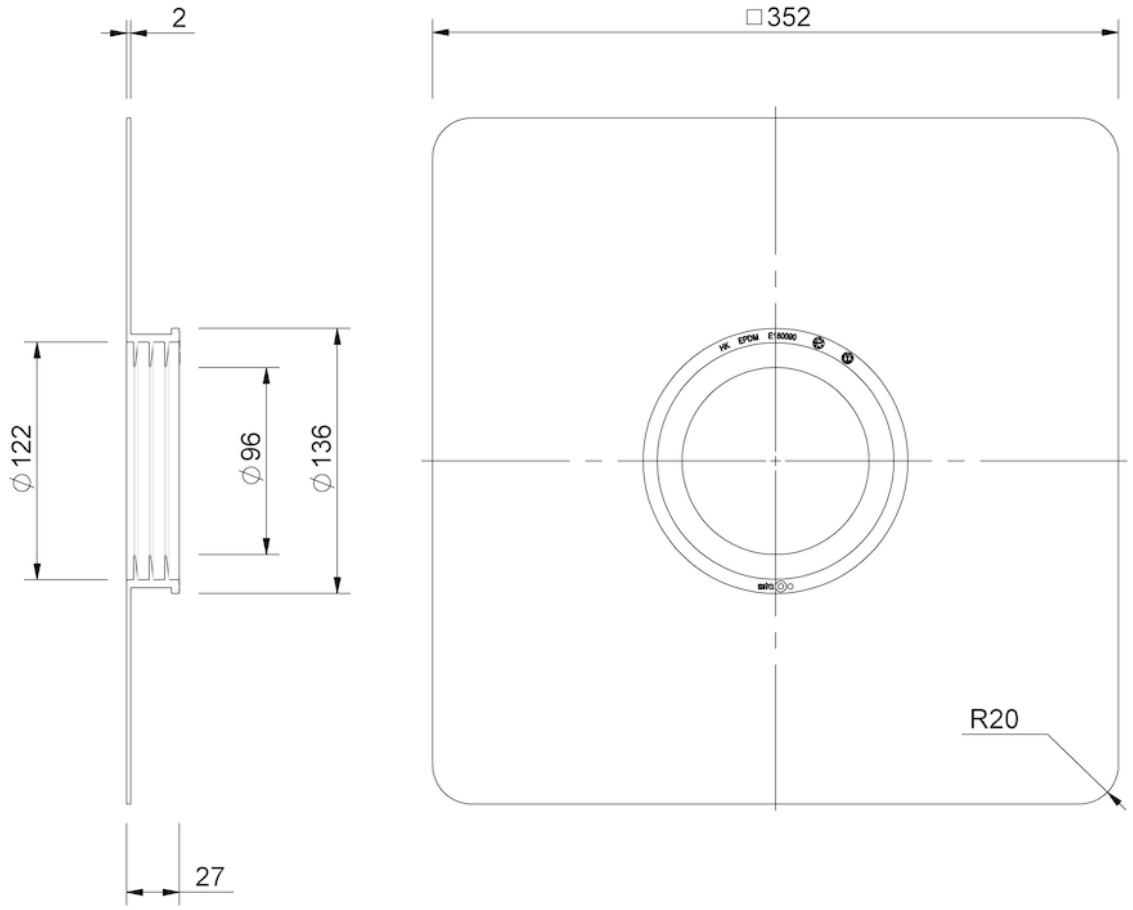

SitaMore flex vapour barrier plate DN 100, made of EPDM

Article number

180090

Changes possible due to technical development, subject to mistakes and printing errors.

Sita Bauelemente GmbH * Ferdinand-Braun-Strasse 1 * 33378 Rheda-Wiedenbrück, Germany * Tel +49 2522 8340-0 * Fax +49 2522 8340-100 * info@sita-bauelemente.de * www.sita-bauelemente.de