leicht entwässern. sita

Technical drawing
Sita**Compact** Fluid vertical DN 70

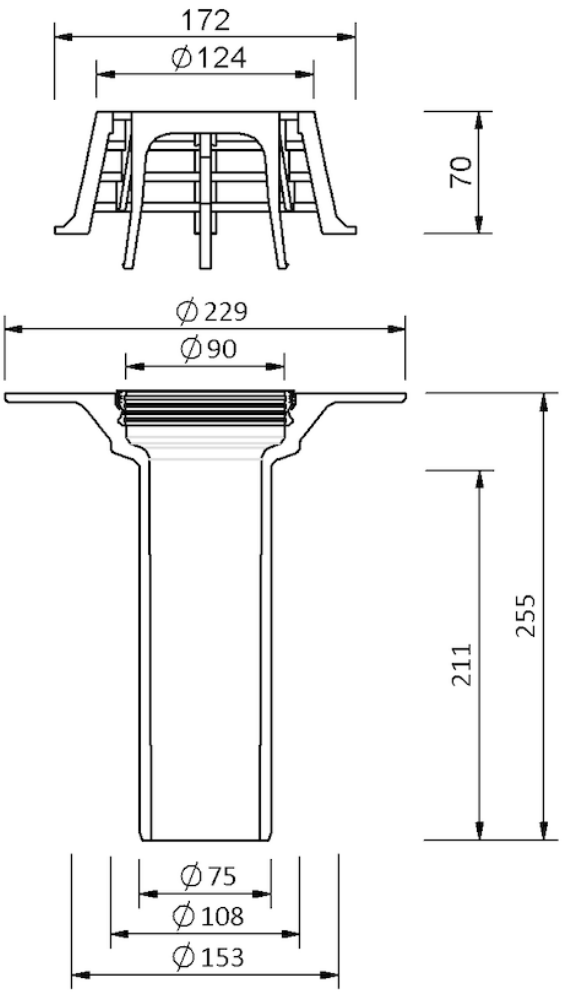

SitaCompact Fluid vertical DN 70, with Adhesive flange
for liquid applied waterproofing

Article number

190290

Changes possible due to technical development, subject to mistakes and printing errors.

Sita Bauelemente GmbH * Ferdinand-Braun-Strasse 1 * 33378 Rheda-Wiedenbrück, Germany * Tel +49 2522 8340-0 * Fax +49 2522 8340-100 * info@sita-bauelemente.de * www.sita-bauelemente.de