leicht entwässern. sita

Technical drawing
Sita**Pipe** stainless steel pipe clamp DN 80

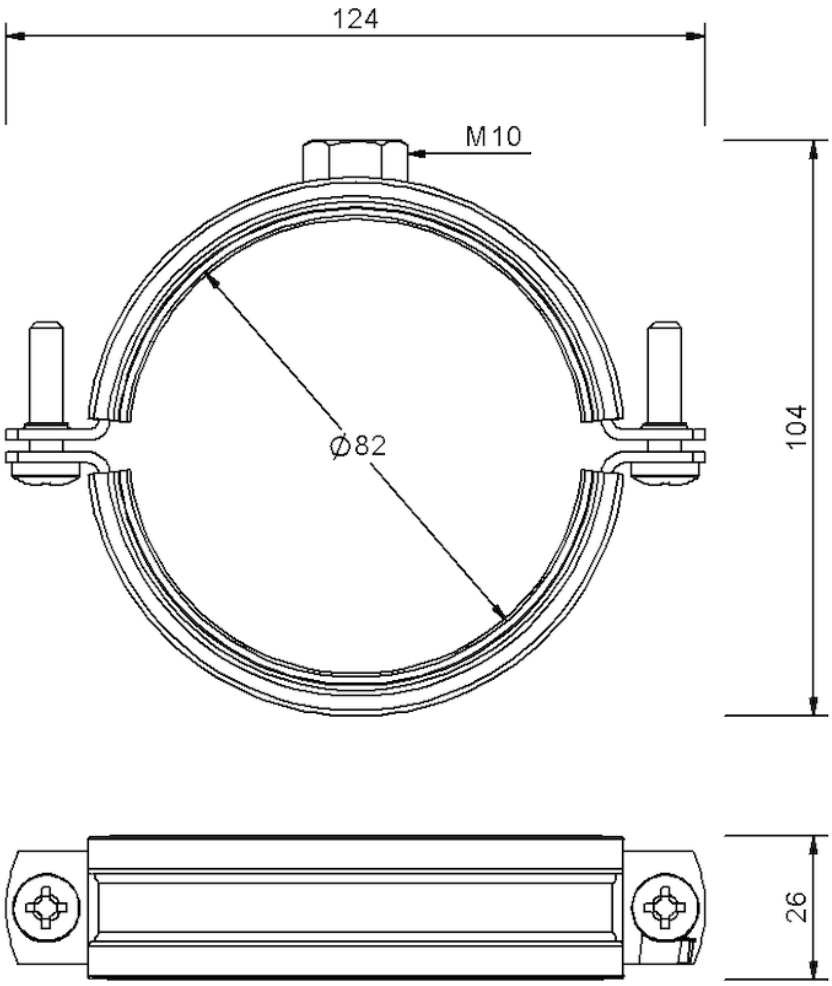

SitaPipe stainless steel pipe clamp DN 80, DIN EN 1124

Article number

74200080

Changes possible due to technical development, subject to mistakes and printing errors.

Sita Bauelemente GmbH * Ferdinand-Braun-Strasse 1 * 33378 Rheda-Wiedenbrück, Germany * Tel +49 2522 8340-0 * Fax +49 2522 8340-100 * info@sita-bauelemente.de * www.sita-bauelemente.de