leicht entwässern. sita

Technical drawing
Sita**Fireguard®** with dome grate, DN 150, 210 mm

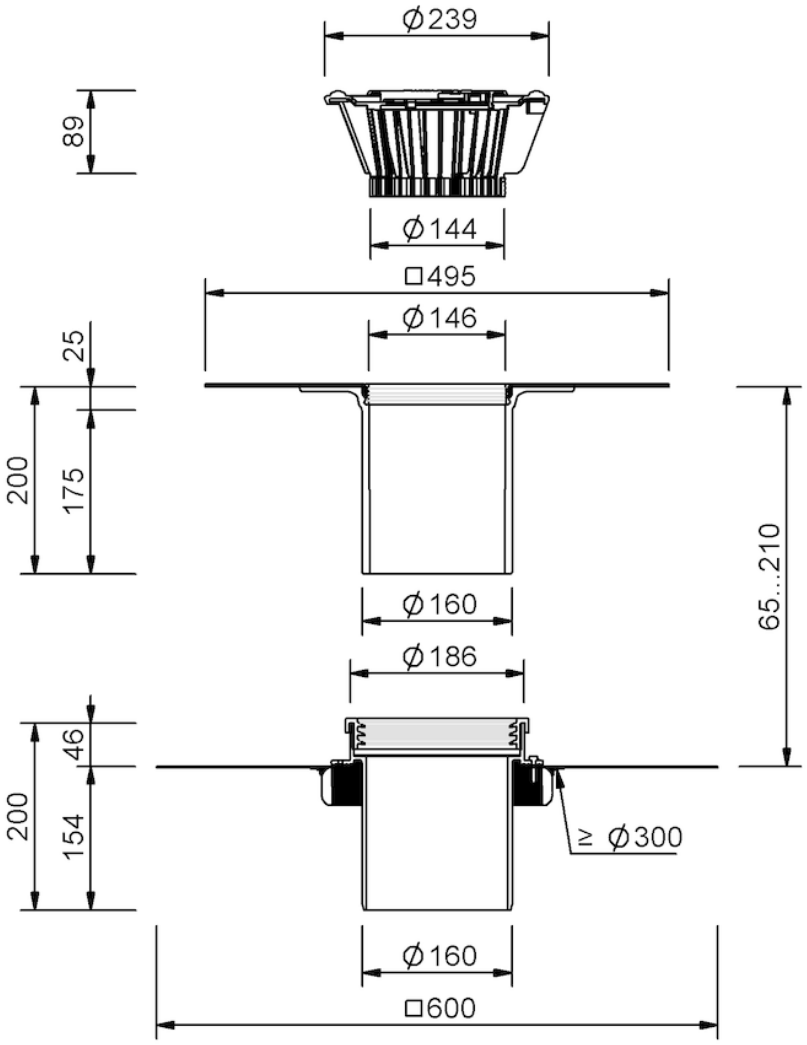

SitaFireguard® with dome grate, DN 150, 210 mm, with bitumen-s-leeve

Article number

F303900

Changes possible due to technical development, subject to mistakes and printing errors.

Sita Bauelemente GmbH * Ferdinand-Braun-Strasse 1 * 33378 Rheda-Wiedenbrück, Germany * Tel +49 2522 8340-0 * Fax +49 2522 8340-100 * info@sita-bauelemente.de * www.sita-bauelemente.de