leicht entwässern.

# Technical drawing
# Sita**Pipe** stainless steel reduction DN 315 to DN 250

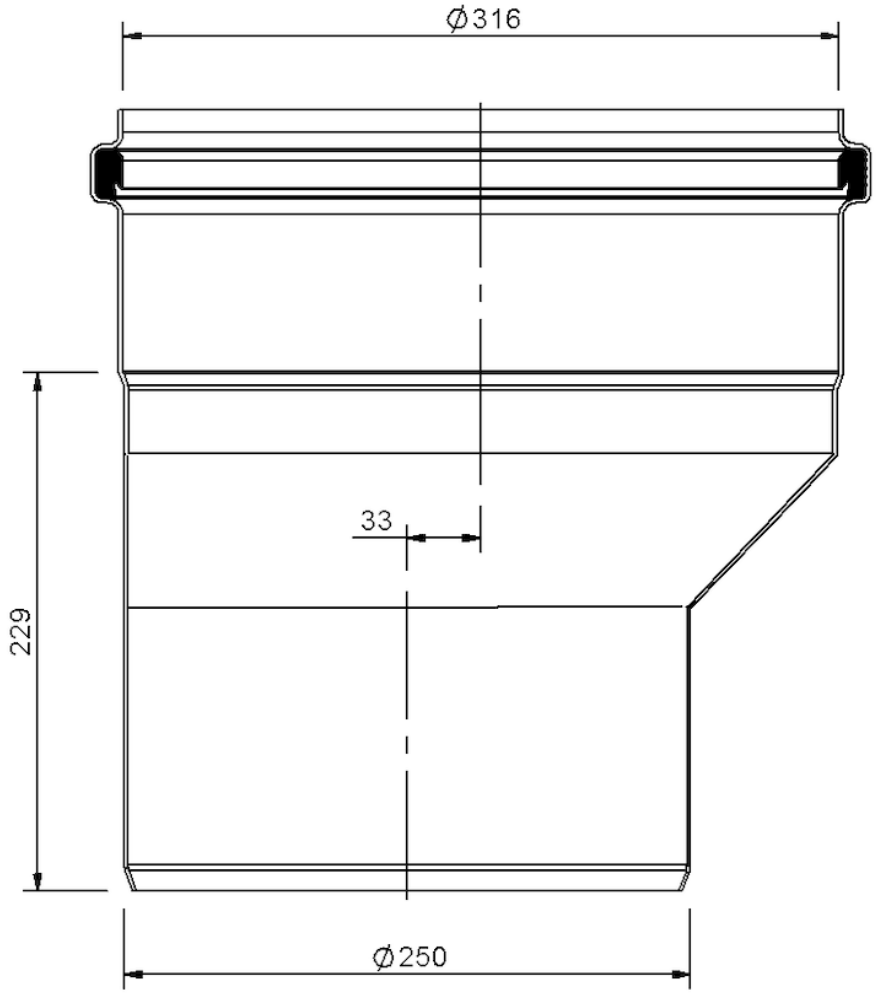


SitaPipe stainless steel reduction DN 315 to DN 250, DIN EN 1124

Article number

70022531

Changes possible due to technical development, subject to mistakes and printing errors.

Sita Bauelemente GmbH * Ferdinand-Braun-Strasse 1 * 33378 Rheda-Wiedenbrück, Germany * Tel +49 2522 8340-0 * Fax +49 2522 8340-100 * info@sita-bauelemente.de * www.sita-bauelemente.de