leicht entwässern.

Technical drawing
Sita**Trendy** insulating body for extension units 100 mm

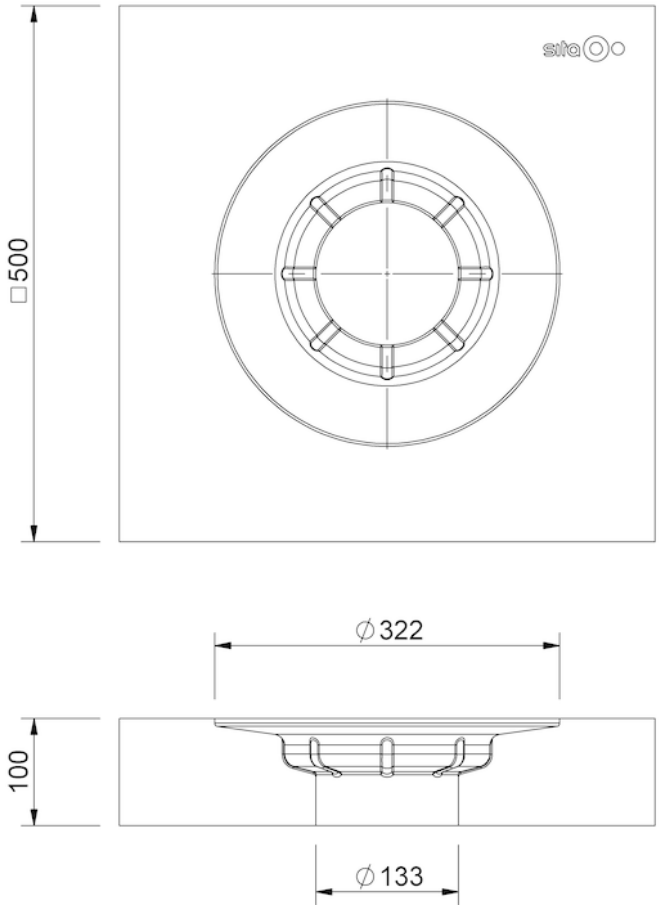

SitaTrendy insulating body for extension units 100 mm, made of Polyurethane

Article number

159005

Changes possible due to technical development, subject to mistakes and printing errors.

Sita Bauelemente GmbH * Ferdinand-Braun-Strasse 1 * 33378 Rheda-Wiedenbrück, Germany * Tel +49 2522 8340-0 * Fax +49 2522 8340-100 * info@sita-bauelemente.de * www.sita-bauelemente.de