leicht entwässern.

Technical drawing
Sita**Pipe** stainless steel cleaning pipe DN 150

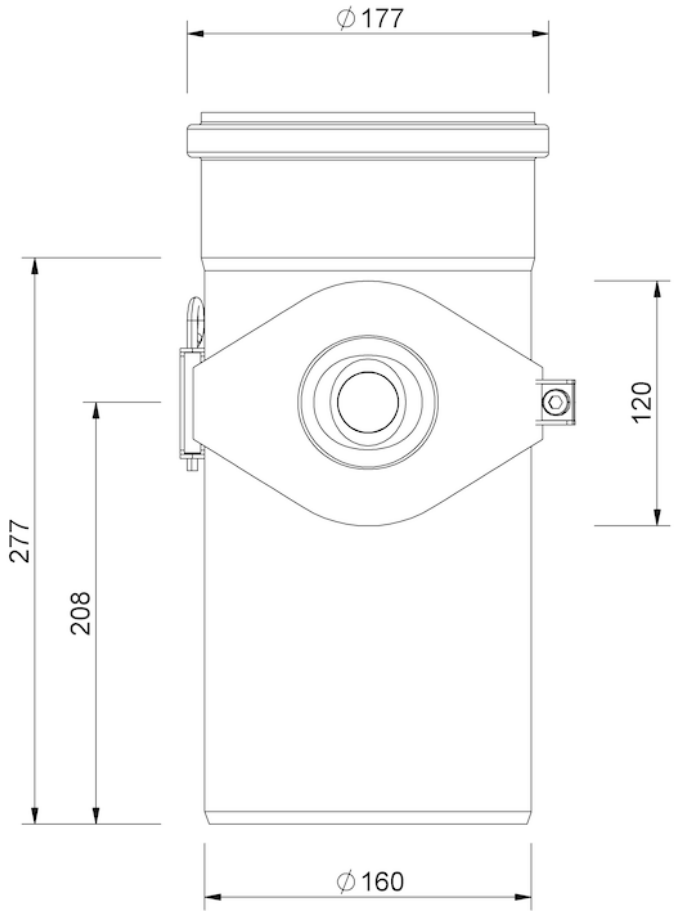

SitaPipe stainless steel cleaning pipe DN 150, DIN EN 1124

Article number

70081113

Changes possible due to technical development, subject to mistakes and printing errors.

Sita Bauelemente GmbH * Ferdinand-Braun-Strasse 1 * 33378 Rheda-Wiedenbrück, Germany * Tel +49 2522 8340-0 * Fax +49 2522 8340-100 * info@sita-bauelemente.de * www.sita-bauelemente.de