leicht entwässern.

# Technical drawing
# Sita**Pipe** PP cleaning pipe DN 125

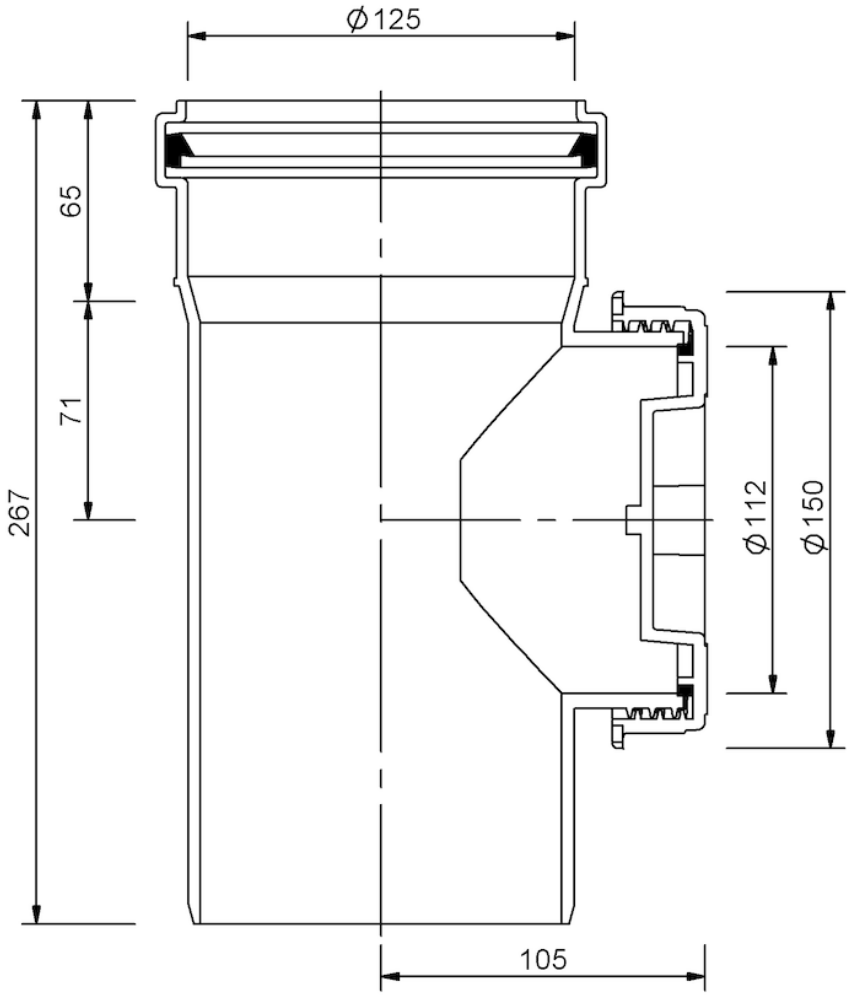


SitaPipe PP cleaning pipe DN 125, DIN EN 1451-1

Article number

60081112

Changes possible due to technical development, subject to mistakes and printing errors.

Sita Bauelemente GmbH * Ferdinand-Braun-Strasse 1 * 33378 Rheda-Wiedenbrück, Germany * Tel +49 2522 8340-0 * Fax +49 2522 8340-100 * info@sita-bauelemente.de * www.sita-bauelemente.de