leicht entwässern.

Technical drawing
Sita**Turbo** Max inverted roof with retaining ring

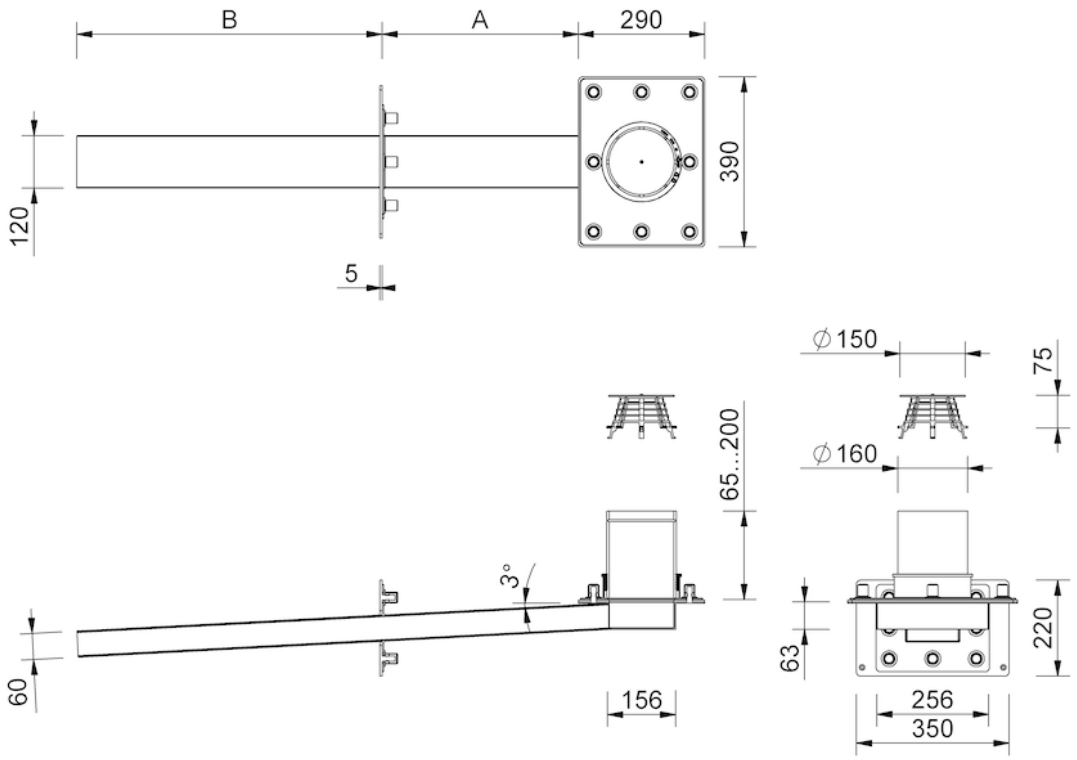

SitaTurbo Max inverted roof with retaining ring, Customised design

200 mm

Article number

18216599

Changes possible due to technical development, subject to mistakes and printing errors.

Sita Bauelemente GmbH * Ferdinand-Braun-Strasse 1 * 33378 Rheda-Wiedenbrück, Germany * Tel +49 2522 8340-0 * Fax +49 2522 8340-100 * info@sita-bauelemente.de * www.sita-bauelemente.de