leicht entwässern.

Technical drawing
Sita**Pipe** stainless steel pipe DN 70, 150 mm

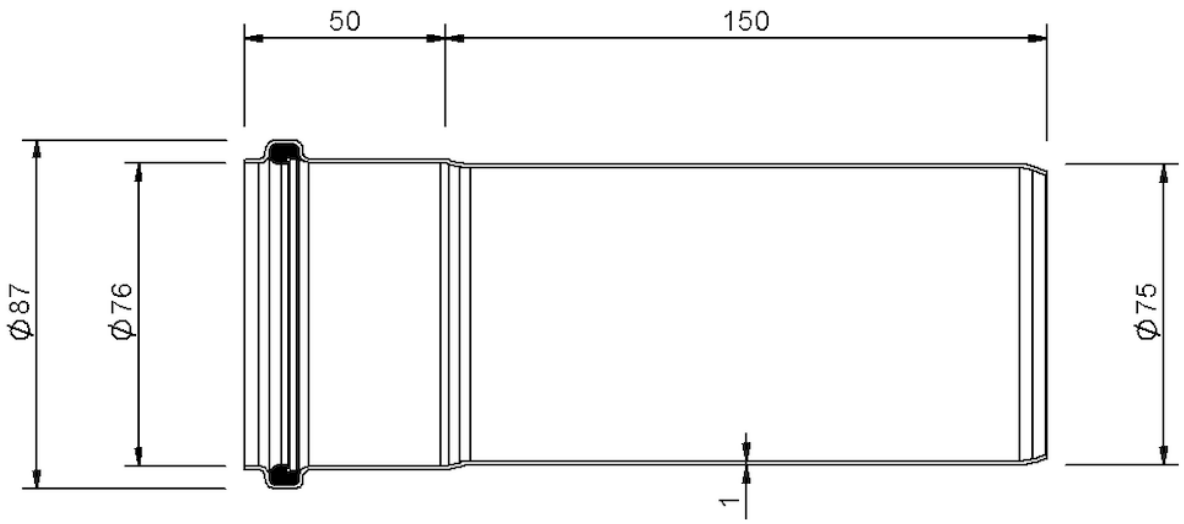

SitaPipe stainless steel pipe DN 70, 150 mm, DIN EN 1124

Article number

70007015

Changes possible due to technical development, subject to mistakes and printing errors.

Sita Bauelemente GmbH * Ferdinand-Braun-Strasse 1 * 33378 Rheda-Wiedenbrück, Germany * Tel +49 2522 8340-0 * Fax +49 2522 8340-100 * info@sita-bauelemente.de * www.sita-bauelemente.de