leicht entwässern. sita

Technical drawing
Sita**Vasant** DN 100, 500 mm

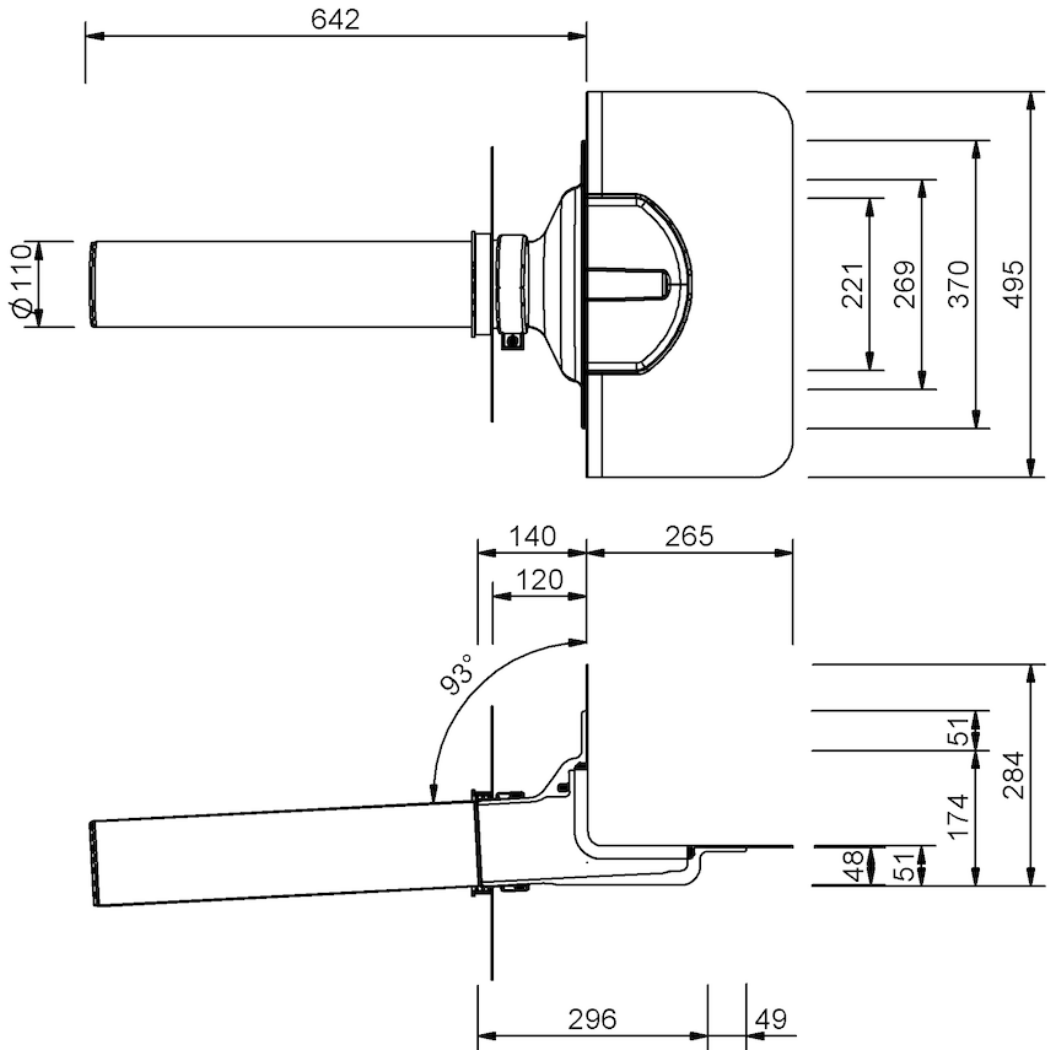

SitaVasant DN 100, 500 mm, with Evalastic V-sleeve

Article number

500422

Changes possible due to technical development, subject to mistakes and printing errors.

Sita Bauelemente GmbH * Ferdinand-Braun-Strasse 1 * 33378 Rheda-Wiedenbrück, Germany * Tel +49 2522 8340-0 * Fax +49 2522 8340-100 * info@sita-bauelemente.de * www.sita-bauelemente.de