leicht entwässern. sita

# Technical drawing
# Sita**Pipe** stainless steel safety clamp DN 150

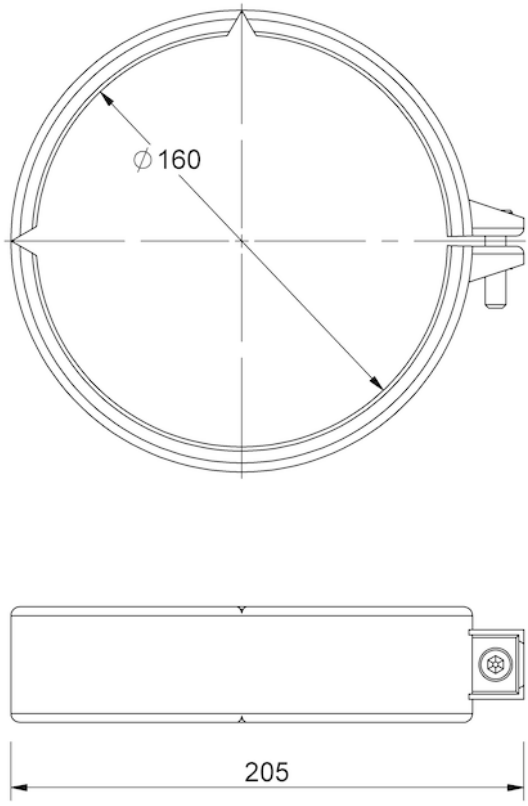


SitaPipe stainless steel safety clamp DN 150, DIN EN 1124

Article number

70121616

Changes possible due to technical development, subject to mistakes and printing errors.

Sita Bauelemente GmbH * Ferdinand-Braun-Strasse 1 * 33378 Rheda-Wiedenbrück, Germany * Tel +49 2522 8340-0 * Fax +49 2522 8340-100 * info@sita-bauelemente.de * www.sita-bauelemente.de