leicht entwässern.

Technical drawing
Sita**Pipe** stainless steel transition piece eccentric, DN 200 to DN 315

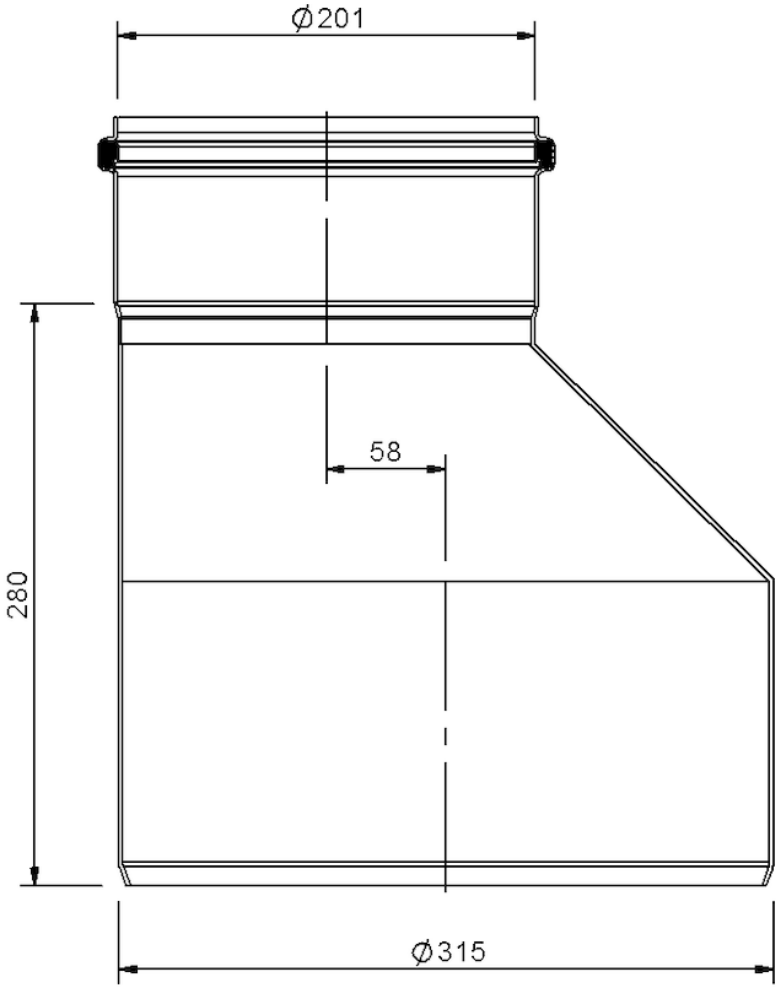

SitaPipe stainless steel transition piece eccentric, DN 200 to DN 315, DIN EN 1124

Article number

70013120

Changes possible due to technical development, subject to mistakes and printing errors.

Sita Bauelemente GmbH * Ferdinand-Braun-Strasse 1 * 33378 Rheda-Wiedenbrück, Germany * Tel +49 2522 8340-0 * Fax +49 2522 8340-100 * info@sita-bauelemente.de * www.sita-bauelemente.de