leicht entwässern.

Technical drawing
Sita**Compact** Fluid pipe holder

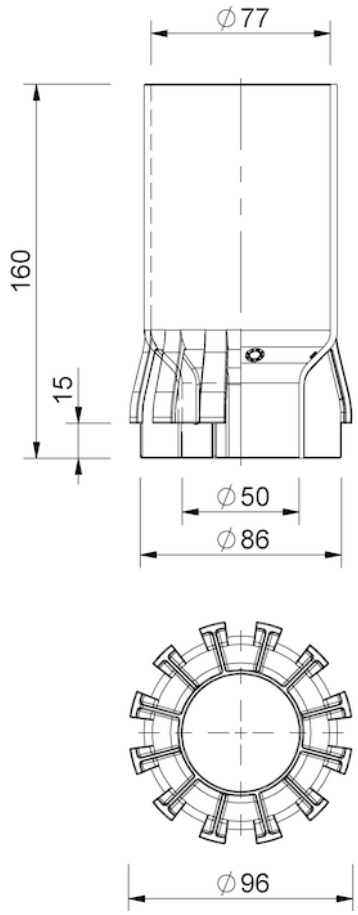

SitaCompact Fluid pipe holder, made of ABS (acrylonitrile butadiene styrene)

Article number

199023

Changes possible due to technical development, subject to mistakes and printing errors.

Sita Bauelemente GmbH * Ferdinand-Braun-Strasse 1 * 33378 Rheda-Wiedenbrück, Germany * Tel +49 2522 8340-0 * Fax +49 2522 8340-100 * info@sita-bauelemente.de * www.sita-bauelemente.de