leicht entwässern.

Technical drawing
Sita**Pipe** stainless steel pipe clamp DN 315

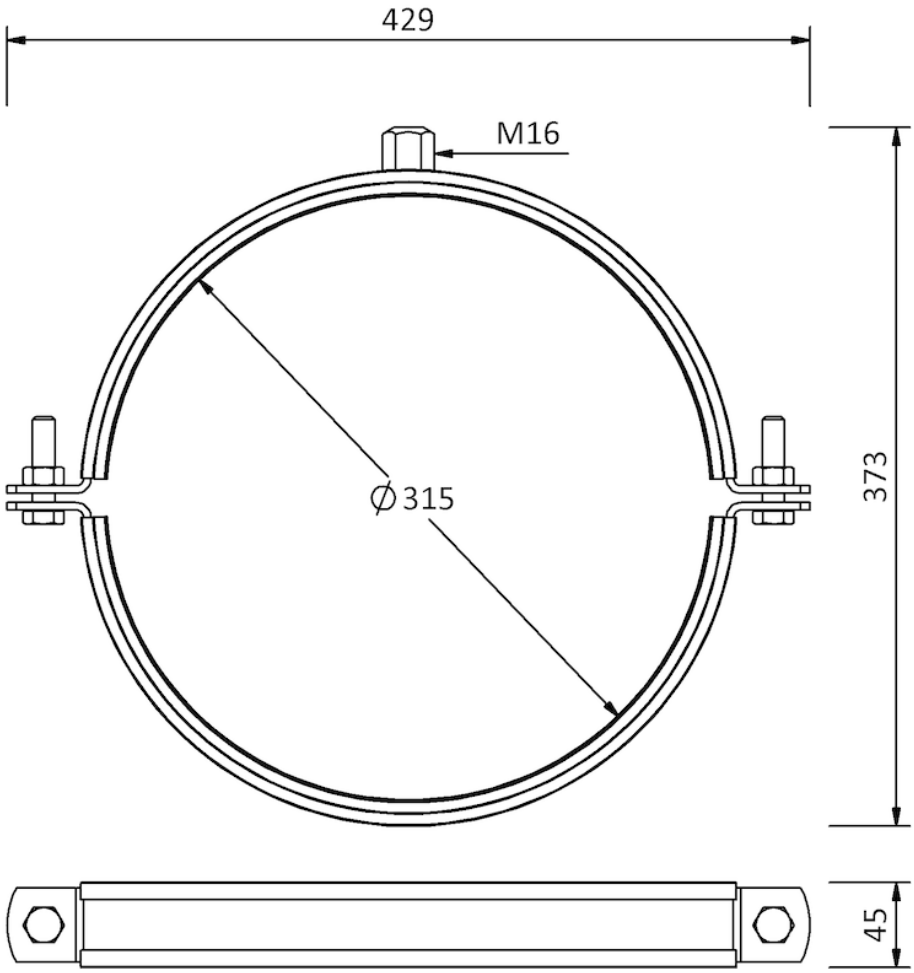

SitaPipe stainless steel pipe clamp DN 315, DIN EN 1124

Article number

74200031

Changes possible due to technical development, subject to mistakes and printing errors.

Sita Bauelemente GmbH * Ferdinand-Braun-Strasse 1 * 33378 Rheda-Wiedenbrück, Germany * Tel +49 2522 8340-0 * Fax +49 2522 8340-100 * info@sita-bauelemente.de * www.sita-bauelemente.de