leicht entwässern.

Technical drawing
Sita**Pipe** stainless steel pipe clamp DN 125

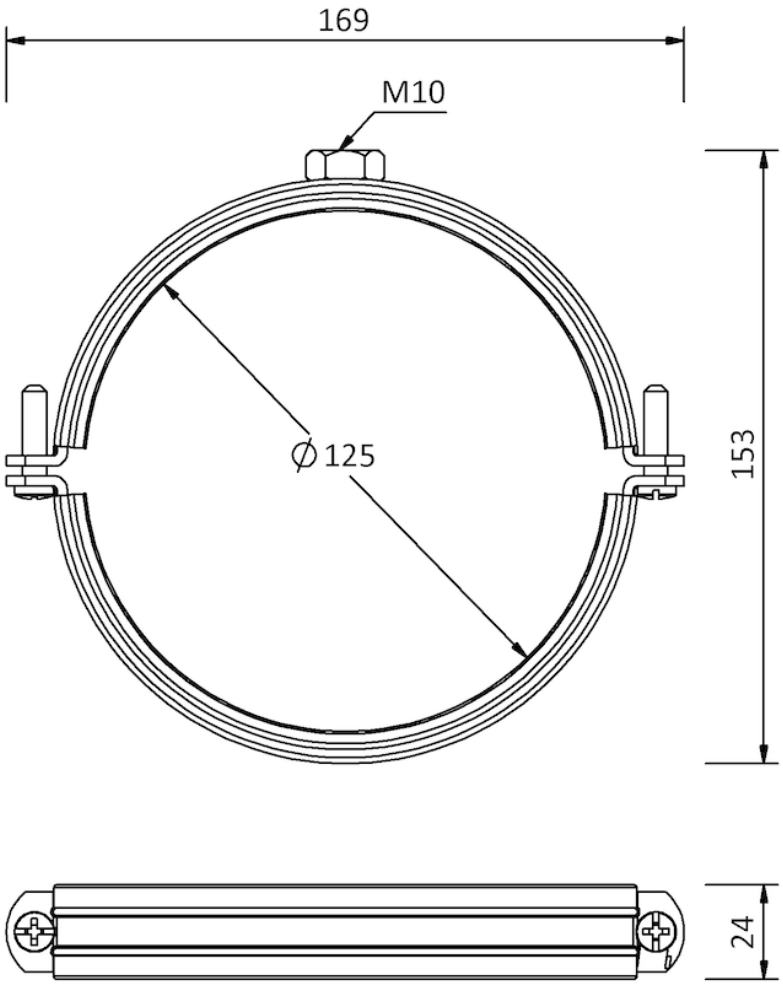

SitaPipe stainless steel pipe clamp DN 125, DIN EN 1124

Article number

74200012

Changes possible due to technical development, subject to mistakes and printing errors.

Sita Bauelemente GmbH * Ferdinand-Braun-Strasse 1 * 33378 Rheda-Wiedenbrück, Germany * Tel +49 2522 8340-0 * Fax +49 2522 8340-100 * info@sita-bauelemente.de * www.sita-bauelemente.de