leicht entwässern. sita

# Technical drawing
# Sita**Compact** vertical DN 70

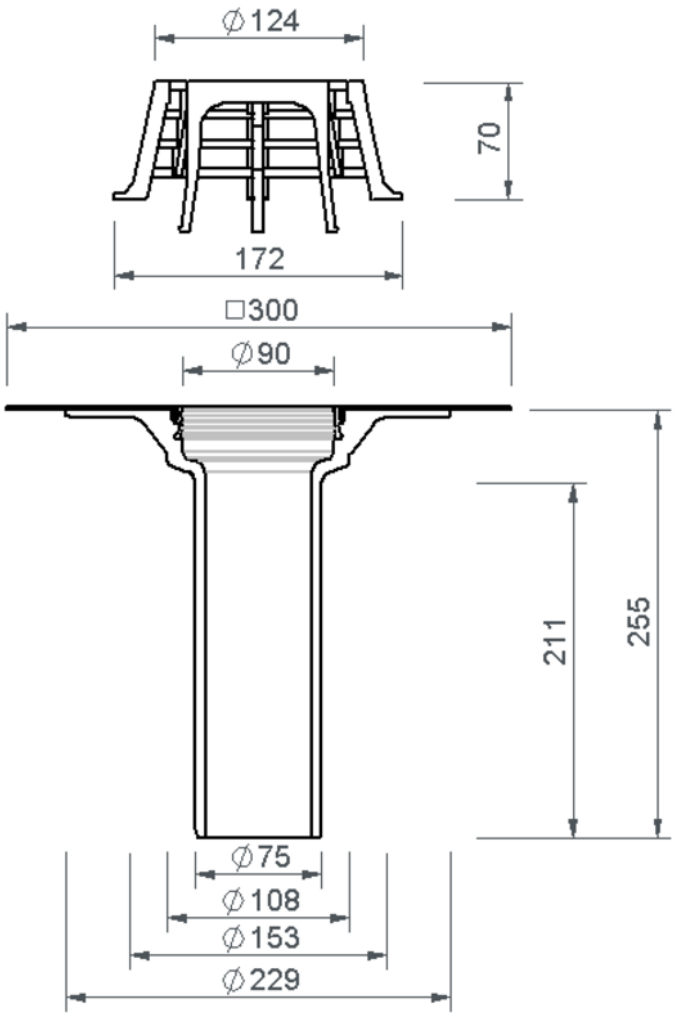


SitaCompact vertical DN 70, with Thermofin F15-sleeve

Article number

190202

Changes possible due to technical development, subject to mistakes and printing errors.

Sita Bauelemente GmbH * Ferdinand-Braun-Strasse 1 * 33378 Rheda-Wiedenbrück, Germany * Tel +49 2522 8340-0 * Fax +49 2522 8340-100 * info@sita-bauelemente.de * www.sita-bauelemente.de