leicht entwässern.

Technical drawing
Sita**Pipe** stainless steel reduction DN 70 to DN 50

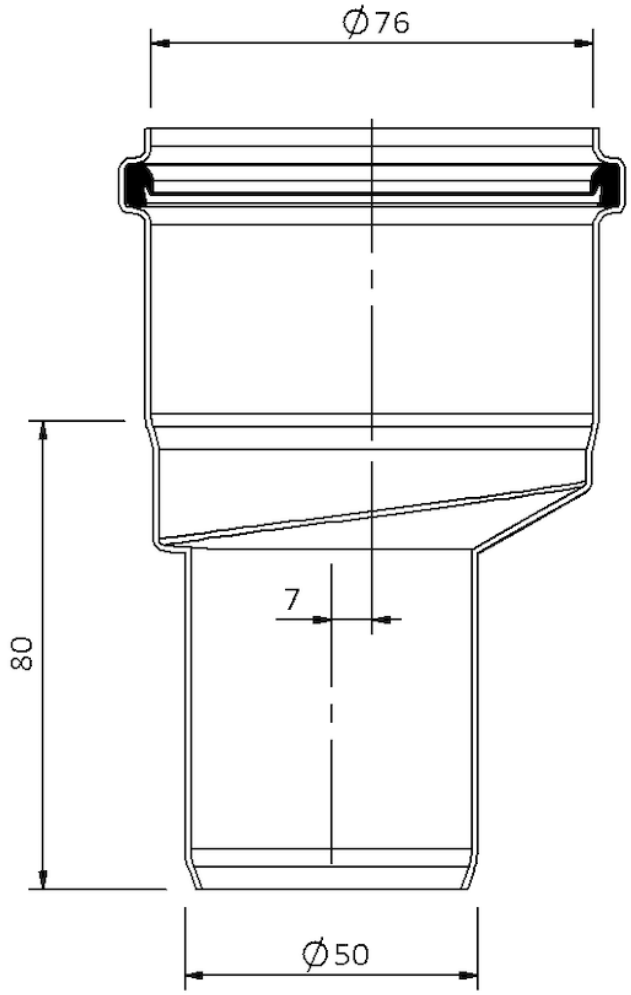

SitaPipe stainless steel reduction DN 70 to DN 50, DIN EN 1124

Article number

70025075

Changes possible due to technical development, subject to mistakes and printing errors.

Sita Bauelemente GmbH * Ferdinand-Braun-Strasse 1 * 33378 Rheda-Wiedenbrück, Germany * Tel +49 2522 8340-0 * Fax +49 2522 8340-100 * info@sita-bauelemente.de * www.sita-bauelemente.de