leicht entwässern. sita

Technical drawing
Sita**Pipe** stainless steel safety clamp DN 50

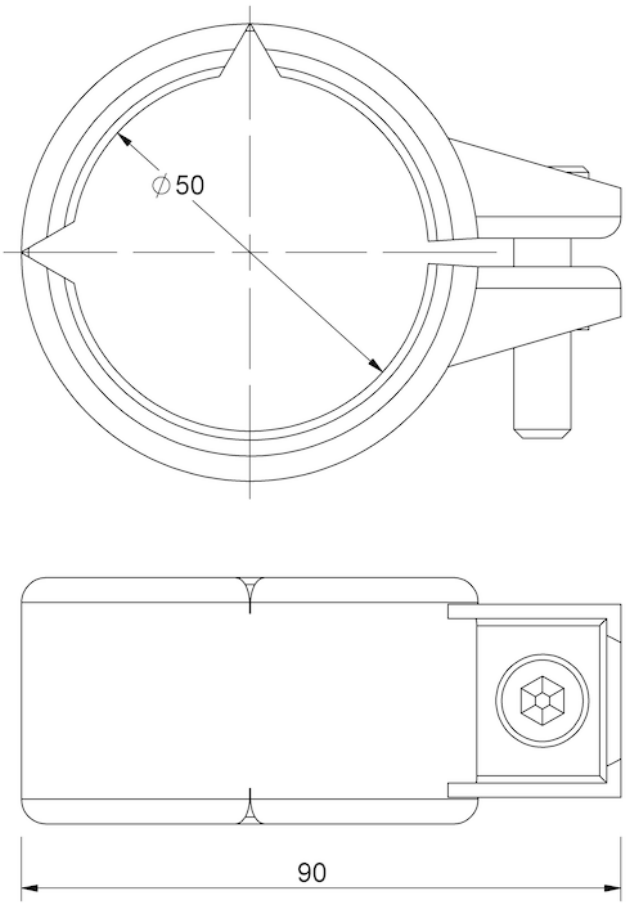

SitaPipe stainless steel safety clamp DN 50, DIN EN 1124

Article number

70125050

Changes possible due to technical development, subject to mistakes and printing errors.

Sita Bauelemente GmbH * Ferdinand-Braun-Strasse 1 * 33378 Rheda-Wiedenbrück, Germany * Tel +49 2522 8340-0 * Fax +49 2522 8340-100 * info@sita-bauelemente.de * www.sita-bauelemente.de