leicht entwässern. sita

Technical drawing
Sita**Standard** Fluid vertical, heated, DN 150

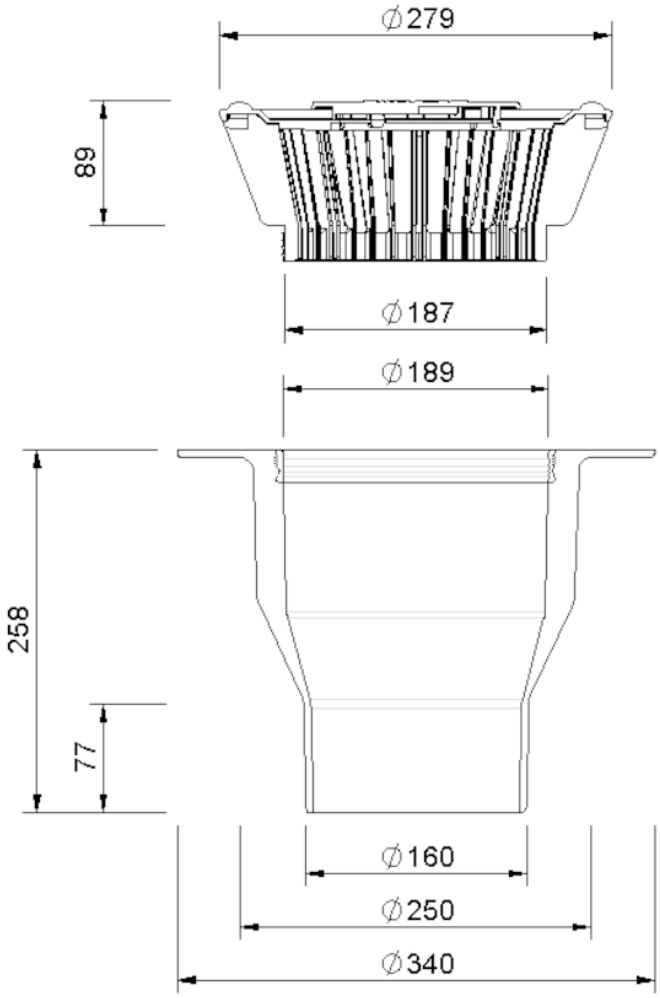

SitaStandard Fluid vertical, heated, DN 150, with Adhesive flange heated

Article number

100990

Changes possible due to technical development, subject to mistakes and printing errors.

Sita Bauelemente GmbH * Ferdinand-Braun-Strasse 1 * 33378 Rheda-Wiedenbrück, Germany * Tel +49 2522 8340-0 * Fax +49 2522 8340-100 * info@sita-bauelemente.de * www.sita-bauelemente.de