leicht entwässern. sita

Technical drawing
Sita**Sani®** 125, 250 mm

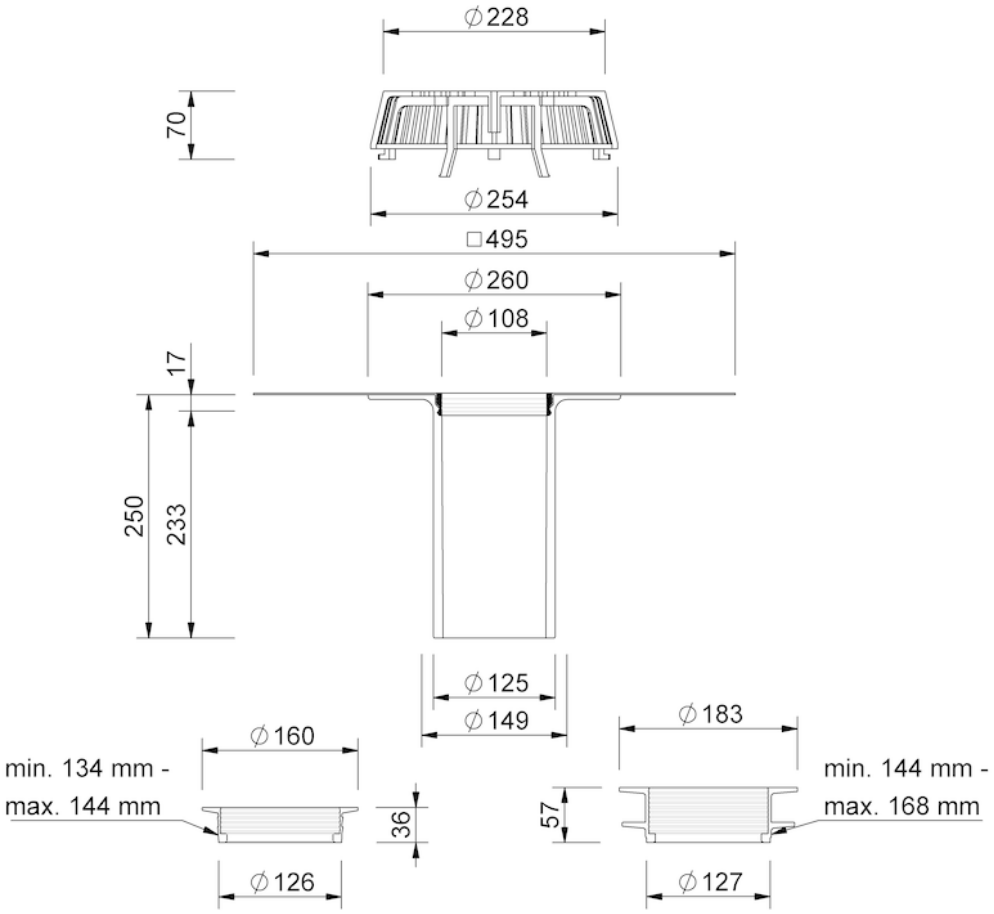

SitaSani® 125, 250 mm, with Sikaplan 15G-sleeve

250 mm

Article number

102709

Changes possible due to technical development, subject to mistakes and printing errors.

Sita Bauelemente GmbH * Ferdinand-Braun-Strasse 1 * 33378 Rheda-Wiedenbrück, Germany * Tel +49 2522 8340-0 * Fax +49 2522 8340-100 * info@sita-bauelemente.de * www.sita-bauelemente.de