leicht entwässern.

Technical drawing
Sita**Pipe** stainless steel pipe DN 40, 1000 mm

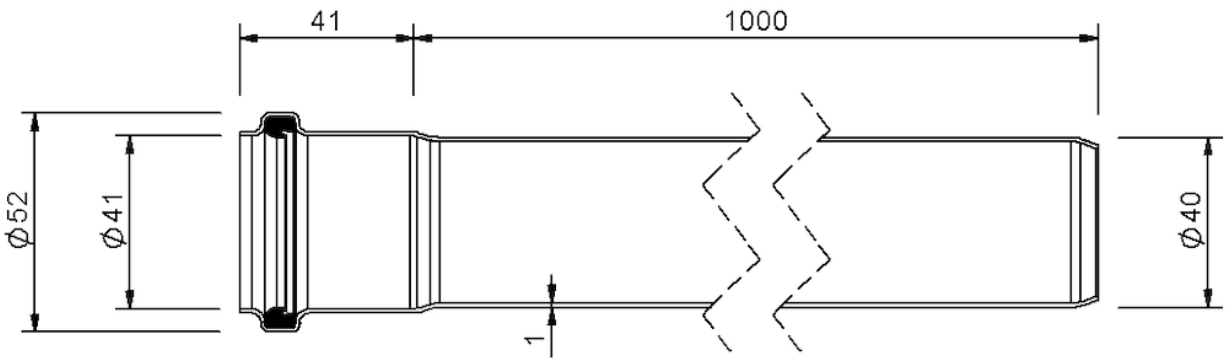

SitaPipe stainless steel pipe DN 40, 1000 mm, DIN EN 1124

Article number

70004010

Changes possible due to technical development, subject to mistakes and printing errors.

Sita Bauelemente GmbH * Ferdinand-Braun-Strasse 1 * 33378 Rheda-Wiedenbrück, Germany * Tel +49 2522 8340-0 * Fax +49 2522 8340-100 * info@sita-bauelemente.de * www.sita-bauelemente.de