leicht entwässern. sita

Technical drawing

Sita**More** dome grate for SitaTrendy, SitaSani® 63, 90, 105, 165 und SitaEasy Plus DN 150

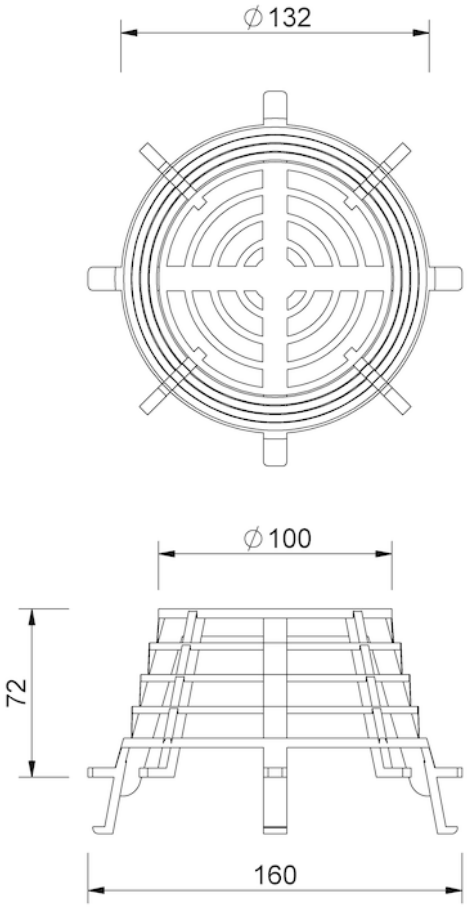

SitaMore dome grate for SitaTrendy, SitaSani® 63, 90, 105, 165 und SitaEasy Plus DN 150, made of Polyamide

Article number

E159015

Changes possible due to technical development, subject to mistakes and printing errors.

Sita Bauelemente GmbH * Ferdinand-Braun-Strasse 1 * 33378 Rheda-Wiedenbrück, Germany * Tel +49 2522 8340-0 * Fax +49 2522 8340-100 * info@sita-bauelemente.de * www.sita-bauelemente.de