leicht entwässern.

Technical drawing
Sita**Kaskade** lead-through Fluid DN 100

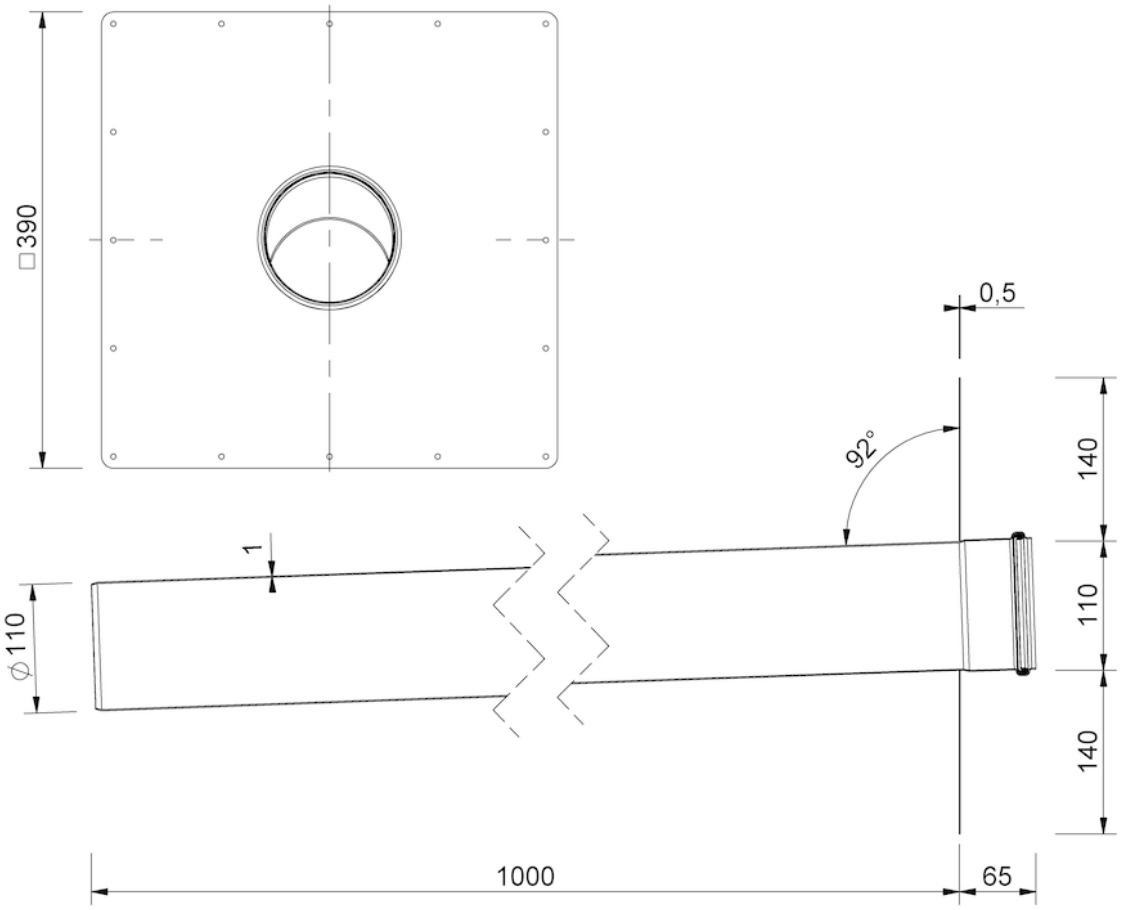

SitaKaskade lead-through Fluid DN 100, made of Rust-free stainless steel

for liquid applied waterproofing

Article number

181699

Changes possible due to technical development, subject to mistakes and printing errors.

Sita Bauelemente GmbH * Ferdinand-Braun-Strasse 1 * 33378 Rheda-Wiedenbrück, Germany * Tel +49 2522 8340-0 * Fax +49 2522 8340-100 * info@sita-bauelemente.de * www.sita-bauelemente.de