leicht entwässern.

# Technical drawing
# Sita**Drain®** height adjustment set 1

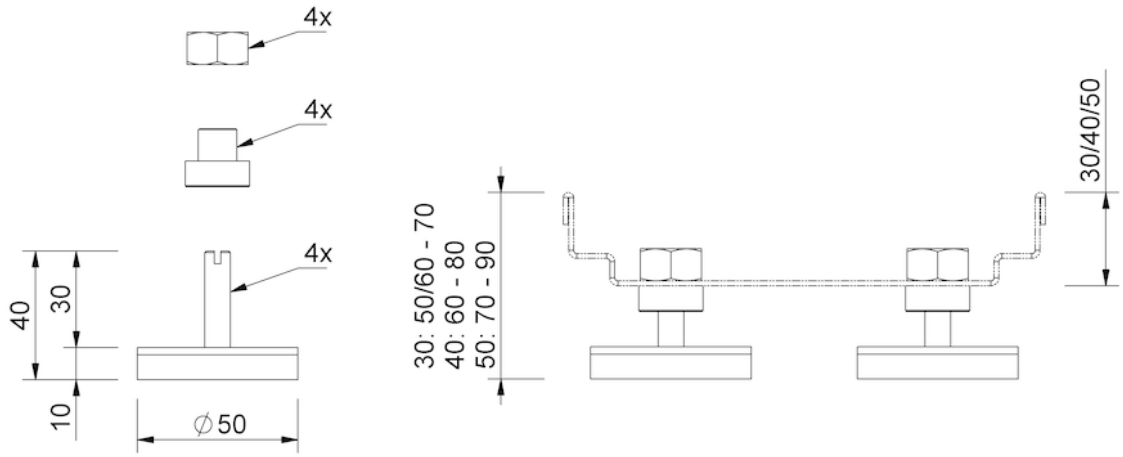


SitaDrain® height adjustment set 1, 50 - 90 mm, 4 feet, made of Rust-proof stainless steel

Article number

249130

Changes possible due to technical development, subject to mistakes and printing errors.

Sita Bauelemente GmbH * Ferdinand-Braun-Strasse 1 * 33378 Rheda-Wiedenbrück, Germany * Tel +49 2522 8340-0 * Fax +49 2522 8340-100 * info@sita-bauelemente.de * www.sita-bauelemente.de