leicht entwässern. sita

Technical drawing
Sita**Sani®** 165, 200 mm

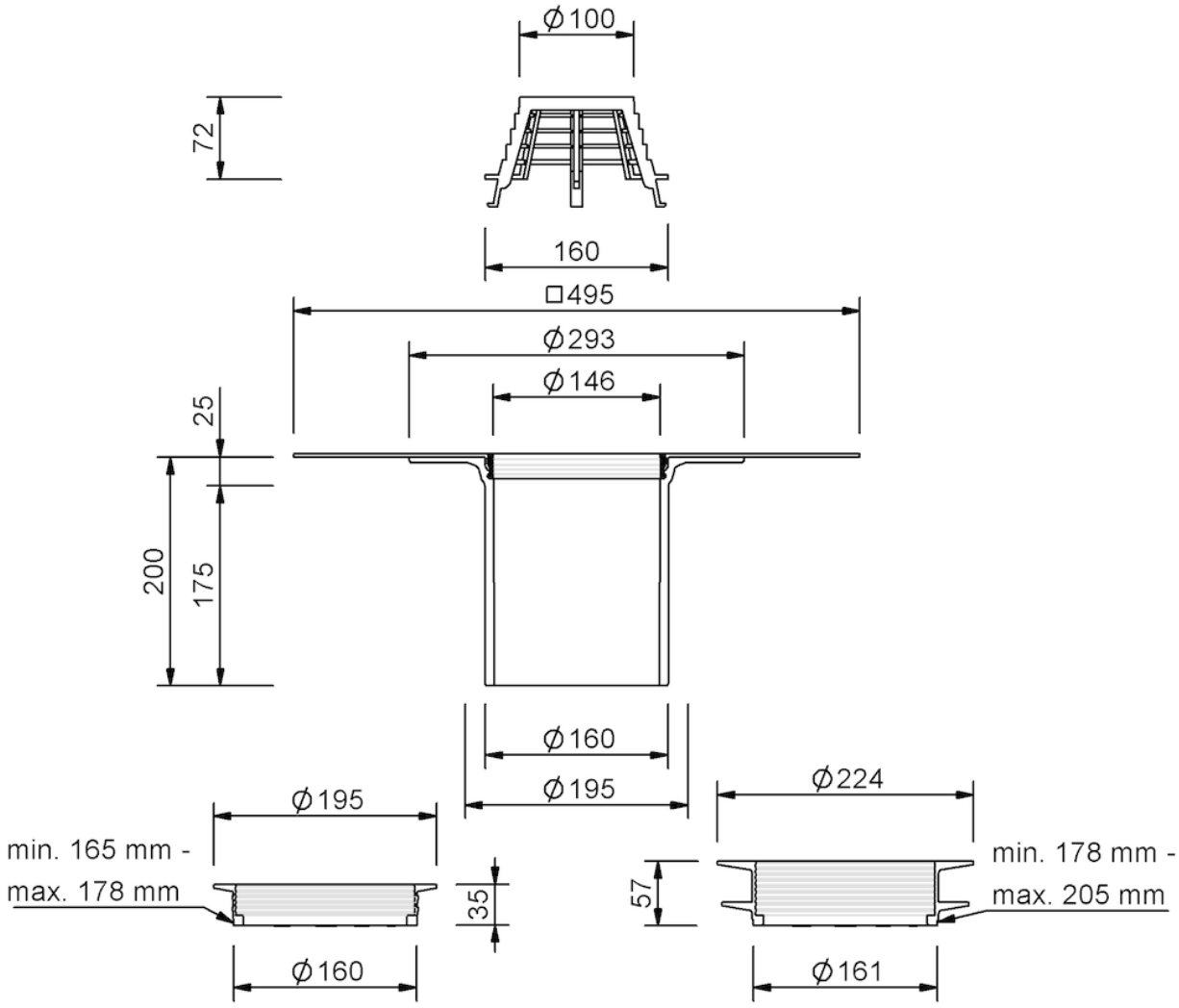

SitaSani® 165, 200 mm, with Polyfin 4020 v-sleeve

200 mm

Article number

102916

Changes possible due to technical development, subject to mistakes and printing errors.

Sita Bauelemente GmbH * Ferdinand-Braun-Strasse 1 * 33378 Rheda-Wiedenbrück, Germany * Tel +49 2522 8340-0 * Fax +49 2522 8340-100 * info@sita-bauelemente.de * www.sita-bauelemente.de