leicht entwässern.

Technical drawing
Sita**Pipe** stainless steel bend 30°, DN 70

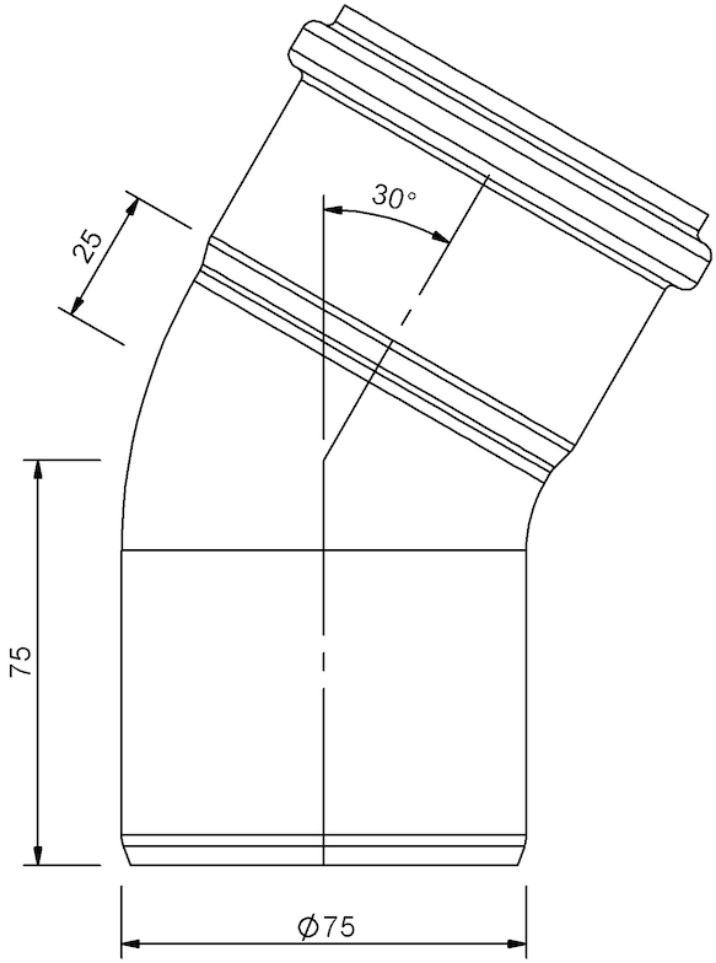

SitaPipe stainless steel bend 30°, DN 70, DIN EN 1124

Article number

70043075

Changes possible due to technical development, subject to mistakes and printing errors.

Sita Bauelemente GmbH * Ferdinand-Braun-Strasse 1 * 33378 Rheda-Wiedenbrück, Germany * Tel +49 2522 8340-0 * Fax +49 2522 8340-100 * info@sita-bauelemente.de * www.sita-bauelemente.de