leicht entwässern. sita

# Technical drawing
# Sita**DSS** Indra emergency drainage

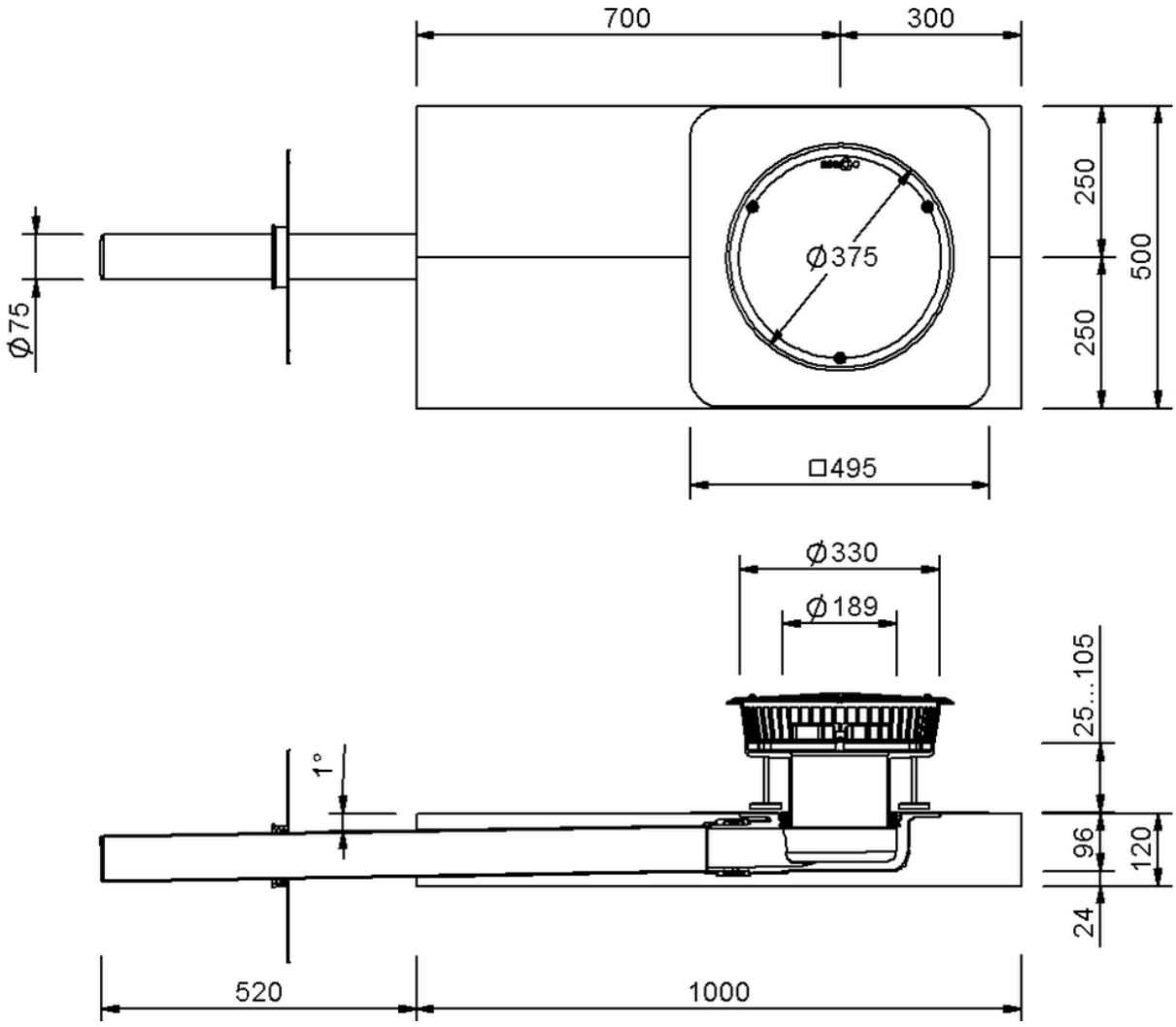


SitaDSS Indra emergency drainage, 2.0 metre fall pipe, Polyurethane insulating body, with Mapeplan T D-sleeve

2.0 metre fall pipe

Article number

147404

Changes possible due to technical development, subject to mistakes and printing errors.

Sita Bauelemente GmbH * Ferdinand-Braun-Strasse 1 * 33378 Rheda-Wiedenbrück, Germany * Tel +49 2522 8340-0 * Fax +49 2522 8340-100 * info@sita-bau-elemente.de * www.sita-bauelemente.de