leicht entwässern.

# Technical drawing
# Sita**Pipe** stainless steel reduction DN 100 to DN 80

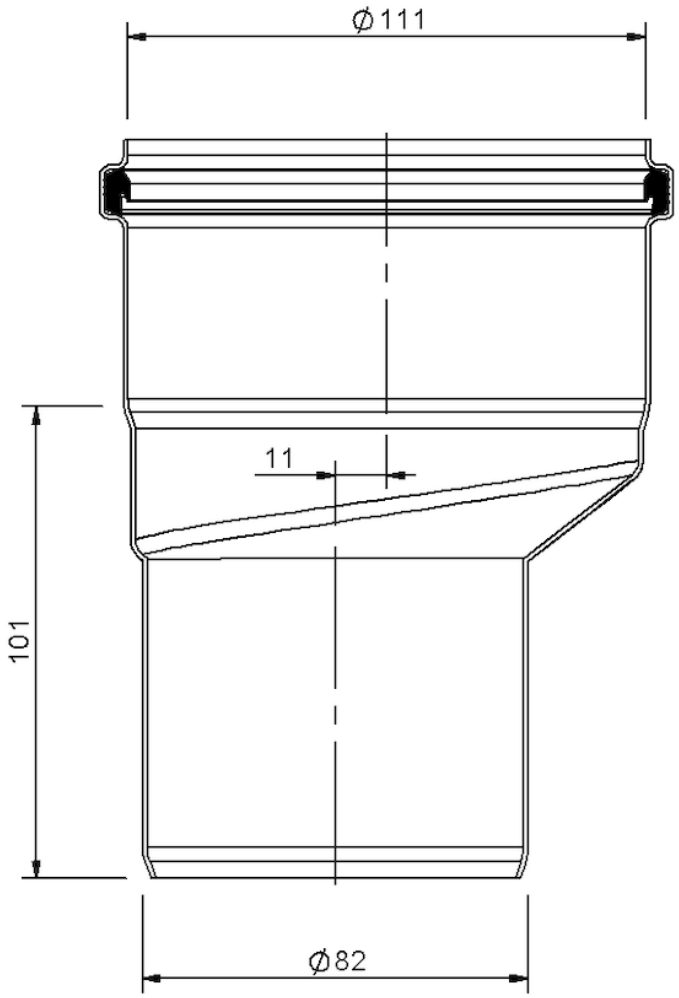


SitaPipe stainless steel reduction DN 100 to DN 80, DIN EN 1124

Article number

70028011

Changes possible due to technical development, subject to mistakes and printing errors.

Sita Bauelemente GmbH * Ferdinand-Braun-Strasse 1 * 33378 Rheda-Wiedenbrück, Germany * Tel +49 2522 8340-0 * Fax +49 2522 8340-100 * info@sita-bauelemente.de * www.sita-bauelemente.de