leicht entwässern.

# Technical drawing
# Sita**Pipe** stainless steel transition piece eccentric, DN 250 to DN 315

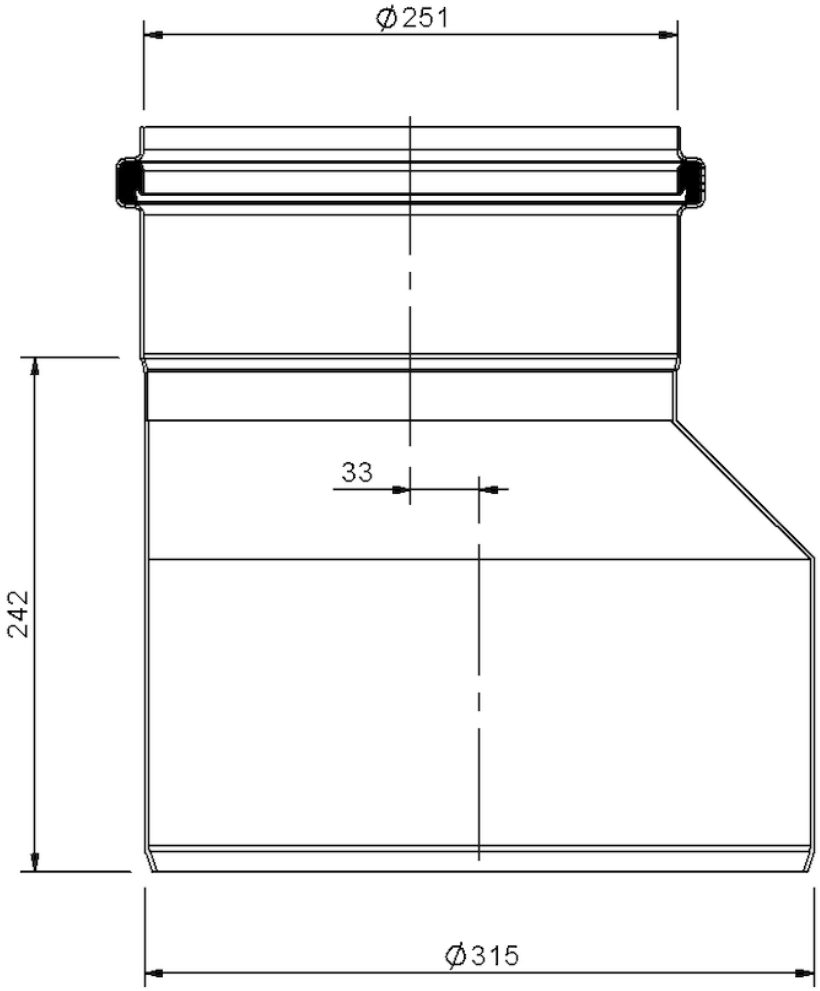


SitaPipe stainless steel transition piece eccentric, DN 250 to DN 315, DIN EN 1124

Article number

70013125

Changes possible due to technical development, subject to mistakes and printing errors.

Sita Bauelemente GmbH * Ferdinand-Braun-Strasse 1 * 33378 Rheda-Wiedenbrück, Germany * Tel +49 2522 8340-0 * Fax +49 2522 8340-100 * info@sita-bauelemente.de * www.sita-bauelemente.de