leicht entwässern. sita

Technical drawing
Sita**Pipe** stainless steel cleaning pipe DN 100

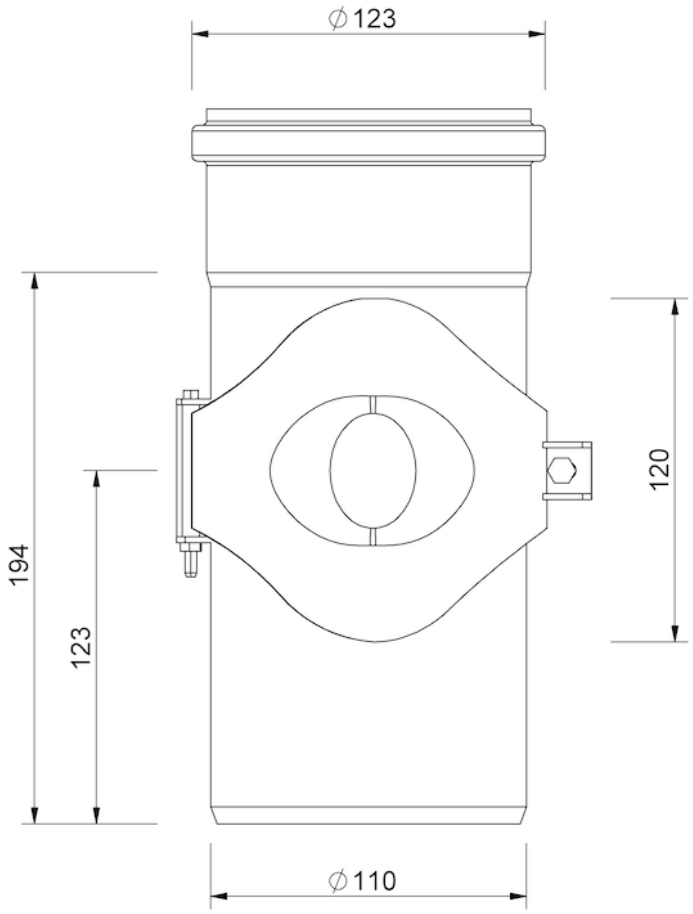

SitaPipe stainless steel cleaning pipe DN 100, DIN EN 1124

Article number

70081111

Changes possible due to technical development, subject to mistakes and printing errors.

Sita Bauelemente GmbH * Ferdinand-Braun-Strasse 1 * 33378 Rheda-Wiedenbrück, Germany * Tel +49 2522 8340-0 * Fax +49 2522 8340-100 * info@sita-bauelemente.de * www.sita-bauelemente.de