leicht entwässern.

Technical drawing
Sita**Pipe** Edelstahl sealing plug DN 50

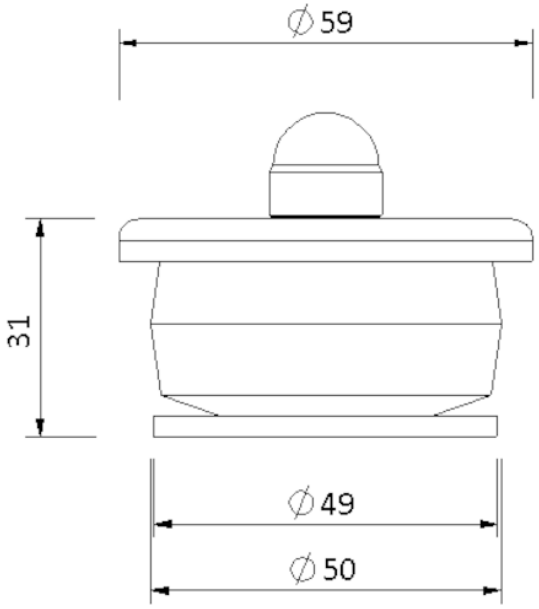

SitaPipe Edelstahl sealing plug DN 50, DIN EN 1124

Article number

70135000

Changes possible due to technical development, subject to mistakes and printing errors.

Sita Bauelemente GmbH * Ferdinand-Braun-Strasse 1 * 33378 Rheda-Wiedenbrück, Germany * Tel +49 2522 8340-0 * Fax +49 2522 8340-100 * info@sita-bauelemente.de * www.sita-bauelemente.de