leicht entwässern.

Technical drawing
Sita**Turbo** Max with loose flange as a retaining element

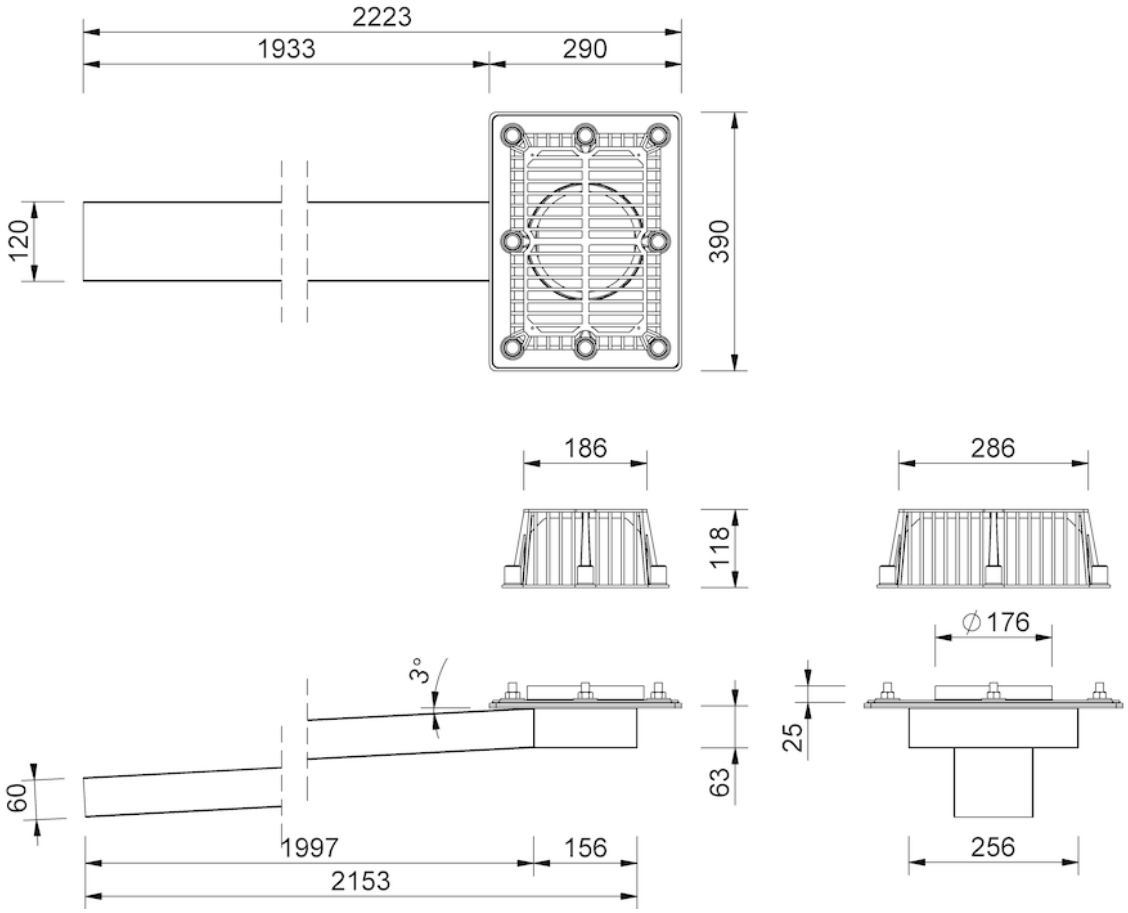

SitaTurbo Max, pipe length 2000 mm, with 25 mm loose flange retaining element

25 mm

Article number

18202599

Changes possible due to technical development, subject to mistakes and printing errors.

Sita Bauelemente GmbH * Ferdinand-Braun-Strasse 1 * 33378 Rheda-Wiedenbrück, Germany * Tel +49 2522 8340-0 * Fax +49 2522 8340-100 * info@sita-bauelemente.de * www.sita-bauelemente.de