leicht entwässern.

Technical drawing

Sita**More** dome grate for SitaCompact, SitaCarport and SitaSani 70, 95

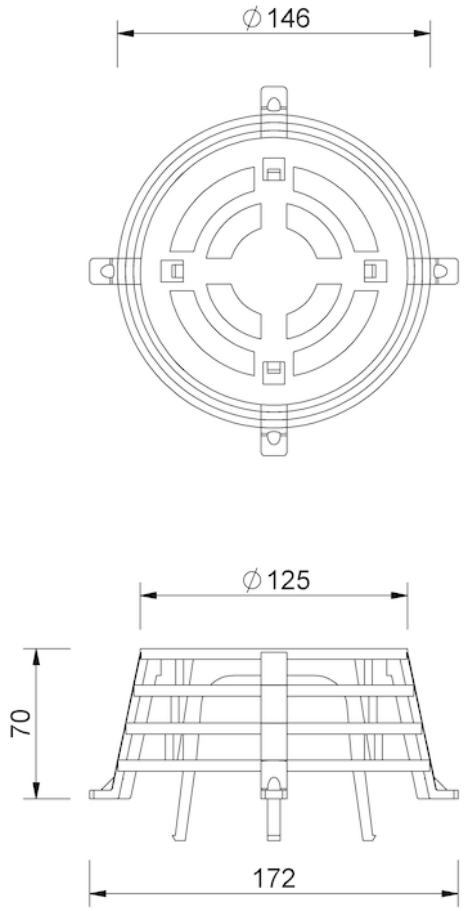

SitaMore dome grate for SitaCompact, SitaCarport and SitaSani 70, 95, made of Polyamide

Article number

E199012

Changes possible due to technical development, subject to mistakes and printing errors.

Sita Bauelemente GmbH * Ferdinand-Braun-Strasse 1 * 33378 Rheda-Wiedenbrück, Germany * Tel +49 2522 8340-0 * Fax +49 2522 8340-100 * info@sita-bauelemente.de * www.sita-bauelemente.de