leicht entwässern. sita

Technical drawing
Sita**Pipe** stainless steel cleaning branch DN 315

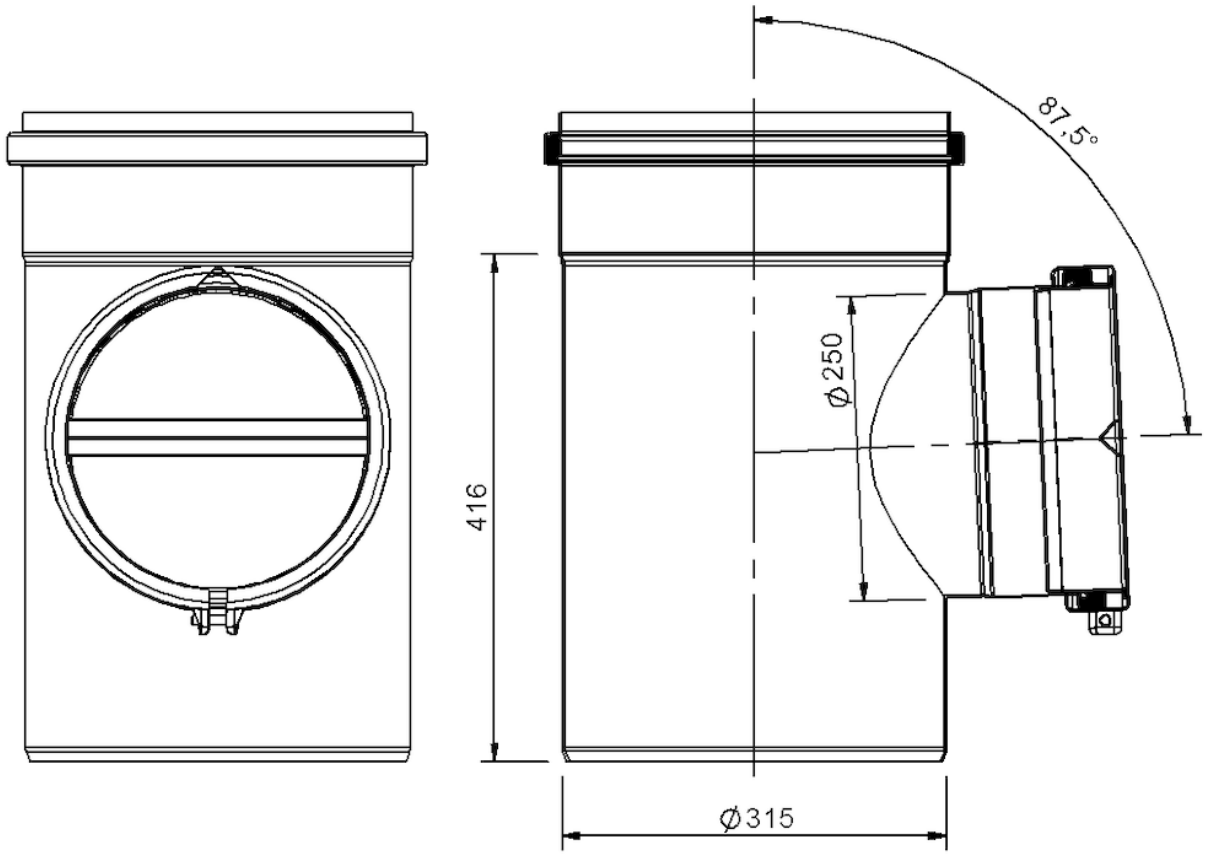

SitaPipe stainless steel cleaning branch DN 315, DIN EN 1124

Article number

70083125

Changes possible due to technical development, subject to mistakes and printing errors.

Sita Bauelemente GmbH * Ferdinand-Braun-Strasse 1 * 33378 Rheda-Wiedenbrück, Germany * Tel +49 2522 8340-0 * Fax +49 2522 8340-100 * info@sita-bauelemente.de * www.sita-bauelemente.de